City of Phoenix Self-Certification Training - Electrical

Rob Runge

(presented today by Sam Backus, Electrical Plans Engineer)

PLANNING & DEVELOPMENT

PRESERVE
SHAPE
BUILD

Topics

- **Current Codes**
- **Code Amendments**
- **Minimum Submittal Requirements**
- **Special Inspections/Observations**
- **Energy Code – (Electrical)**
- **Common Code Violations**
- **Q & A**

PLANNING & DEVELOPMENT
PRESERVE
SHAPE
BUILD

Current Codes

- **2017 NEC w/ city of Phoenix Amendments**
- **2018 IECC Energy Conservation Code**

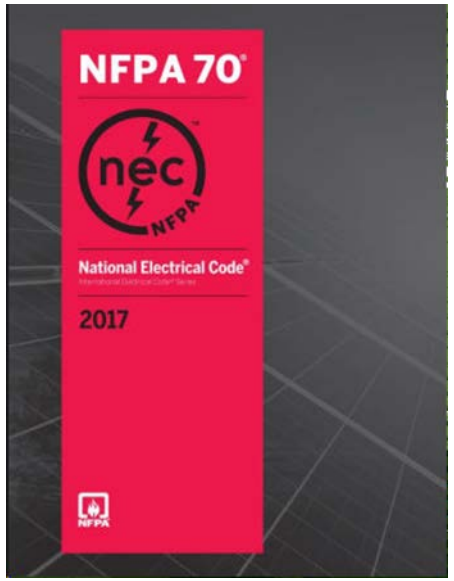

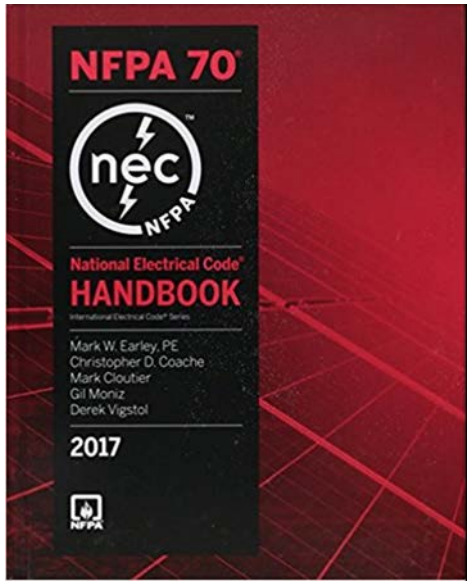

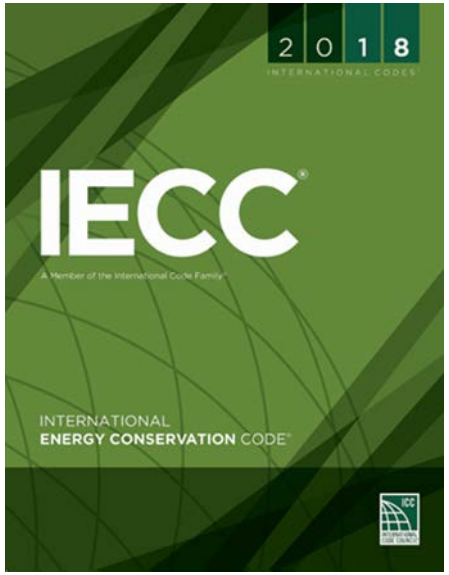

PLANNING & DEVELOPMENT
PRESERVE
SHAPE
BUILD

Code Amendments

- Section 210.8(A)(11) & 210.8(B)(6) Ground-Fault Circuit-Interrupter Protection for Personnel.
- Section 210.52(G)(1) Receptacle height requirement for garage receptacles.
- Section 250.118(4) Types of Equipment Grounding Conductors.
- Section 310.15(B)(7) 120/240V Single-Phase Dwelling Services and Feeders.
- Sections 334.10 Nonmetallic-Sheathed Cable; Uses Permitted.

https://www.phoenix.gov/pddsite/Documents/2017%20National%20Electrical%20Code_NEC.pdf

PLANNING & DEVELOPMENT
PRESERVE
SHAPE
BUILD

Minimum Submittal Requirements for Electrical Plans – PBCC 107.1

1. All plans shall be legible, drawn to scale, and shall include a legend of all symbols used.
2. A complete site plan showing transformer(s) and service equipment location(s) and all exterior lighting or other wiring. (Refer to Outdoor Oil-Insulated Transformer guideline.)
3. A complete plan showing the type and layout of equipment and wiring for each floor, including working space about service equipment, switchboards, panelboards and motor control centers, wire and conduit sizes, and circuit numbers.

https://www.phoenix.gov/pddsite/Documents/TRT/dsd_trt_pdf_00574.pdf

PLANNING & DEVELOPMENT
PRESERVE
SHAPE
BUILD

Minimum Submittal Requirements for Electrical Plans – PBCC 107.1

4. All rooms or spaces shall be clearly identified on the electrical plans.
5. Identify areas and boundaries of all electrically Classified locations and define type of hazard, (Classified material), per NEC 500.5. Show ratings of electrical equipment and wiring methods within or above classified locations.

PLANNING & DEVELOPMENT
PRESERVE
SHAPE
BUILD

Minimum Submittal Requirements for Electrical Plans – PBCC 107.1

6. Identify the serving electrical utility company, APS or SRP. Indicate on the One-Line diagram the maximum Available Fault Current, (AFC), (based on the published Utility AFC Tables, located in the electrical service requirements manual available on the serving utility company's website). The AFC values from the tables must be applied at the SES (Service Entrance Section). Service laterals / drops are **NOT** permitted to be used in the fault calculation since the AFC from the tables already includes them. The AFC value at the SES is the table value corresponding to the SES ampacity size, voltage, and phase and whether the transformer is pole or pad mounted; not the transformer KVA size. If multiple services are served by a single utility transformer, the sum of the SES sizes must be used to obtain the AFC value from the table to apply at each SES location, including existing services, served by that transformer.

PLANNING & DEVELOPMENT
PRESERVE
SHAPE
BUILD

Minimum Submittal Requirements for Electrical Plans – PBCC 107.1

7. Provide Available Fault Current calculations from service-entrance section to lowest rated overcurrent device or equipment. Fault calculations must include conductor size and type, magnetic or non-magnetic conduit type, conductor length, and transformer impedance, (if applicable). (The addition of new circuit breakers or equipment requires Available Fault Current calculations.)

8. The interrupting rating, (AIC – Amps Interrupting Current), of equipment intended to break current at fault levels, NEC 110.9, or the short circuit current rating (SCCR) of equipment intended to withstand available fault current until an upstream overcurrent protective device (OCPD) interrupts the fault, NEC 110.10.

PLANNING & DEVELOPMENT
PRESERVE
SHAPE
BUILD

Minimum Submittal Requirements for Electrical Plans – PBCC 107.1

9. Complete code load calculations for service equipment, switchboards, panelboards and motor control centers as computed in accordance with the Electrical Code or by other methods satisfactory to the Building Official. Load calculations for additions to an existing installation are required for all upstream distribution equipment affected by the added load.
10. The size, length and location of all service and feeder raceways as well as branch circuits over 20-amps.
11. The volt-ampere rating of each outlet, the horsepower rating or the actual nameplate data of the equipment served.
12. The rating of every motor disconnecting device.
13. The KVA rating of each transformer, capacitor unit, converter, or similar equipment..

PLANNING & DEVELOPMENT
PRESERVE
SHAPE
BUILD

Minimum Submittal Requirements for Electrical Plans – PBCC 107.1

14. Service equipment, switchboard, panelboard and motor control center schedules showing volt- ampere and/or ampere rating of feeders, branch circuits, spare and/or future circuits to be installed. This shall include identifying the circuits to which the outlets are connected.

15. One-line diagram of the complete electrical system, including service equipment, switchboards, panelboards, motor control centers, and transformers, showing equipment and feeder sizes and class, type, size and arrangement of overcurrent devices to be installed. Show all applicable electrical ratings, (ie., voltage, phase, wires, ampacity, AIC, Nema rating, minimum transformer impedance, etc.). A One-Line Diagram of all electrical distribution, up to and including the SES, affected by the project, is required anytime new load or equipment is added.

PLANNING & DEVELOPMENT
PRESERVE
SHAPE
BUILD

Minimum Submittal Requirements for Electrical Plans – PBCC 107.1

16. Grounding and bonding details & sizes for service(s), transformer(s), generator(s), separate structures, pools, etc. and sizes of equipment grounding conductors.
17. For solar PV projects, a Three-Line Diagram is required. The One-Line diagram can be omitted if all the required One-Line information is included in the Three-Line Diagram. Cut sheets for all solar PV equipment, (ie., modules, inverters, optimizers, rapid shut down, etc.) are required to be included in the permit submittal.
18. Special Electrical Inspection and/or Electrical Observation forms as required by the scope of the electrical work per PBCC 1705.19 & 1704.7.

PLANNING & DEVELOPMENT
PRESERVE
SHAPE
BUILD

https://www.phoenix.gov/pddsite/Documents/TRT/dsd_trt_pdf_00274.pdf

City of Phoenix
PLANNING & DEVELOPMENT DEPARTMENT

Special Inspection Certificate
Electrical

POST AT JOB SITE WITH PERMIT
(General Requirements and Instructions on the backside of form)

TO BE COMPLETED BY REGISTERED DESIGN PROFESSIONAL IN RESPONSIBLE CHARGE		
Project Name:	Project Address:	Permit No. Plan Log No.
Project Owner/Owner's Agent Name:	Mailing Address:	Phone No.
Registered Design Professional of Record Name:	Mailing Address:	Phone No.
Firm Name:	Email Address:	Fax No.

I hereby affirm that I am familiar with the design of this project and have been designated by the Owner/owner(s) Agent as the registered design professional in responsible charge for implementing the Electrical Special Inspections Program required by the City of Phoenix Building Construction Code Sections 110.3.10 and 1704. I have determined that the types of work checked below require Electrical Special Inspection. I understand and agree to inform the project owner, the contractor(s), and the special inspector(s) about all the Electrical Special Inspection Program requirements and limitations, including that the Special Inspector(s) must be independent third-party individual(s) or Registered Design Professional(s) and shall not be the installing contractor(s).

(Seal, Sign, and Date)

YES	NO ✓	TYPES OF WORK REQUIRING SPECIAL ELECTRICAL INSPECTION (Attach Supplement if Necessary)	QUALIFIED SPECIAL INSPECTOR NAME AND ID NUMBER
		Ground-Fault Protection Systems	
		Switchboards, Panelboards, Motor Control Centers	
		Transformers	
		Conductors	
		Emergency & Standby Power System(s)	
		Selective Coordination	

All special inspection reports were reviewed and found to be in conformance with the approved construction documents.

Registered Design Professional

In responsible charge _____ _____
Signature **Date**

Page 1 of 2

For more information or for a copy of this publication in an alternate format, contact Planning & Development at 602-262-7811 voice or TTY use 7-1-1.

P:\Special Inspection Certificate, Electrical
WEB/dsd_trt_pdf_00274

TRT/DOC/00274
Rev. 01/19

Section 1705.19 Types of work.

1. Ground-fault protection performance tests for equipment provided with ground-fault protection.
2. Switchboards, panelboards, motor control centers and other equipment rated at 1,000 amperes or more, or over 600 volts.
3. Transformers rated 100 KVA or more, single phase, or 300 kVA or more, three phase.
4. Conductors that supply equipment rated at 1,000 amperes or more, or over 600 volts.
5. Emergency and standby power systems, including switchboards, panelboards, distribution boards, transfer equipment, power source, conductors, fire pumps and exhaust and ventilation fans.
6. Selective Coordination - This includes verification of the installation in accordance with the required selective coordination study.
7. Special cases – Work which, in the opinion of the building official, involves unusual hazards or conditions.

The following are general requirements and instructions for processing the Special Electrical Inspections Program form and general information for persons responsible for the special inspections.

GENERAL REQUIREMENTS. Phoenix Building Construction Code (PBCC) Sections 110.3.10 and 1704 require Special Electrical Inspections for the types of work specified in Section 1705.19. Special Electrical Inspections include, but are not limited to, observation of the work assigned for conformance with the approved design drawings and specifications, and submission of appropriate inspection reports to the City of Phoenix Electrical Inspector. See the PBCC and PBCC Regulations/Interpretations for additional information and requirements.

The Special Electrical Inspector shall be a qualified person who demonstrates competence to the satisfaction of the building official for the type of work requiring Special Inspection. Competence shall be demonstrated by licensure as a Professional Electrical Engineer in the State of Arizona or successful application to the city's certified list. These individual(s) shall be responsible for performing the Special Inspection tasks and reports required by the PBCC and PBCC Regulations.

The Special Electrical Inspector(s) shall be an independent, third-party individual or testing agency and shall not be the installing contractor or any other person responsible for the work.

INSTRUCTIONS

REGISTERED DESIGN PROFESSIONAL IN RESPONSIBLE CHARGE. Complete all information requested on this form. Indicate the TYPES OF WORK requiring Special Electrical Inspections. Seal, sign and date the form. Submit to the city with the permit application whenever the code requires special inspections. This form may be reproduced in the construction plans in lieu of submitting separate sheets. **Sign and date the original form after the final inspection report has been reviewed. The qualified special inspector individual must be named on the form at this time.**

PLAN REVIEWER. Review the Special Electrical Inspections Program form for accuracy and ensure that it identifies all work requiring Special Inspections. Complete any missing information (i.e., project and/or permit numbers) if known and indicate on the permit(s) "Special Inspection Required." The Special Electrical Inspections form shall be processed before permit issuance.

CITY ELECTRICAL INSPECTOR. Review the Special Electrical Inspections Program form for the name of the registered design professional in responsible charge, etc. for the Special Electrical Inspections Program and the names of the individual(s) authorized to perform Special Inspections. Address any Special Inspection concerns of the Special Electrical Inspector(s). Attend any necessary job conferences related to Special Inspections procedures. Review all required Special Inspections and final reports and provide copy to records.

SPECIAL INSPECTOR. The individual(s) responsible for the Special Electrical Inspections shall **complete a signed written report after each site visit** requiring Special Inspection. The Special Inspector(s) shall ensure that all reports are posted with the permit at the job site and are available to the City of Phoenix Electrical Inspector for review. All discrepancies shall be brought to the immediate attention of the contractor for correction and, if uncorrected, to the registered design professional in responsible charge, contractor, etc. and to the City of Phoenix Electrical Inspector.

The Special Electrical Inspector shall submit a **final signed report** to the registered design professional in responsible charge, contractor etc. and to the City of Phoenix Electrical Inspector providing final test results and stating whether the items requiring electrical inspection were, to the best of the inspector's knowledge in compliance with the approved plans and specifications and applicable workmanship provisions of the code. Final inspection approval and/or issuance of Certificate of Occupancy will not occur until all Special Inspection reports have been received and accepted by the City of Phoenix Electrical Inspector.

Section 1705.19 Types of work.

1. Ground-fault protection performance tests for equipment provided with ground-fault protection.
2. Switchboards, panelboards, motor control centers and other equipment rated at 1,000 amperes or more, or over 600 volts.
3. Transformers rated 100 KVA or more, single phase, or 300 kVA or more, three phase.
4. Conductors that supply equipment rated at 1,000 amperes or more, or over 600 volts.
5. Emergency and standby power systems, including switchboards, panelboards, distribution boards, transfer equipment, power source, conductors, fire pumps and exhaust and ventilation fans.
6. Selective Coordination - This includes verification of the installation in accordance with the required selective coordination study.
7. Special cases – Work which, in the opinion of the building official, involves unusual hazards or conditions.

https://www.phoenix.gov/pddsite/Documents/TRT/dsd_trt_pdf_00287.pdf

City of Phoenix
PLANNING & DEVELOPMENT DEPARTMENT

ELECTRICAL OBSERVATION
Certificate

POST AT JOB SITE WITH PERMIT
(General Requirements and Instructions on the backside of form)

TO BE COMPLETED BY REGISTERED DESIGN PROFESSIONAL

Project Name:	Project Address:	Permit No. Plan Log No.
Project Owner/Owner's Agent Name:	Mailing Address:	Phone No.
Registered Design Professional of Record Name:	Mailing Address:	Phone No.
Firm Name:	Email Address:	Fax No.

As the Registered Design Professional, I hereby affirm that I am familiar with the design of this project and have been designated by the Owner/Owner(s) Agent as the registered design professional responsible for conducting the Electrical Observation Program required by the Phoenix Building Construction Code Section 110.3.10 and 1704. I have determined that the items checked below require Electrical Observation. I understand and agree to inform the project owner, the contractor(s), and the City of Phoenix Electrical Inspector about all Electrical Observation requirements.

(Seal, Sign & Date)

YES	NO ✓	ITEMS REQUIRING ELECTRICAL OBSERVATION (Attach Supplement if Necessary)
		Essential electrical systems for hospitals and outpatient surgical facilities governed by NEC Article 517
		Electrical systems over 600V
		Electrically Classified Locations except for gasoline dispensing or repair garages

Certificate of Compliance
I certify to the best of my knowledge the electrical requirements of the Phoenix Building Construction Code and approved plans and specifications have been complied with insofar as the portion of the work requiring electrical observation is concerned, except for those deviations that have been previously reported. A guarantee that the contractor has constructed the building in full accord with the plans and specifications is neither intended nor implied.

(Seal, Sign & Date)

Page 1 of 2

For more information or for a copy of this publication in an alternate format, contact Planning & Development at (602) 262-7811 voice / (602) 534-5500 TTY.

S:\Certificate of Observation, Electrical
WEB\dsd_trt_pdf_00287

TRT/DOC/00287
Rev. 01/19

Section 1704.7 General.

1. Installation or alteration of the portion of health care facility electrical systems which falls within the scope of Article 517 of the National Electrical Code, including such systems installed in facilities where outpatient surgical procedures are performed.
2. Installation or alteration of electrical systems over 600V.
3. Installation or alteration of electrical systems within locations classified as hazardous by provisions of the National Electrical Code, except for gasoline dispensing installations and systems located within storage garages, repair garages or lubritoriums.
4. When such observation is specifically required by the Building Official.

CERTIFICATE OF ELECTRICAL OBSERVATION PROGRAM

The following are general requirements and instructions for processing the Electrical Observation Program form and general information for persons responsible for the special inspections.

GENERAL REQUIREMENTS:
Phoenix Building Construction Code (PBCC) Sections 110.3.10 and 1704 require Electrical Observation Inspections for the items specified in Section 1704.7 Electrical Observation includes, but are not limited to, visual observation of the Electrical system for conformance with the approved plans and specifications, at significant construction stages and at completion of the Electrical system, and submission of appropriate observation reports to the City of Phoenix Electrical Inspector. See the PBCC and PBCC Regulations/Interpretations for additional information and requirements.

The Electrical Observer shall be a qualified person who demonstrates competence to the satisfaction of the building official for the items requiring Electrical Observation. Competence shall be demonstrated by licensure as a Professional Electrical Engineer in the State of Arizona. These individual(s) shall be responsible for performing the Electrical Observation tasks and reports required by the PBCC and PBCC Regulations.

The Electrical Observer(s) must be the registered design professional responsible for the Electrical design, or another registered design professional designated by the registered design professional responsible for the Electrical design, to perform the Electrical observation.

INSTRUCTIONS

REGISTERED DESIGN PROFESSIONAL: Complete all information requested on this form. Indicate the ITEMS requiring Electrical Observation. Seal, sign and date the form. Submit to the city with the permit application whenever the code requires Electrical observations. This form may be reproduced in the construction plans in lieu of submitting separate sheets.

PLAN REVIEWER: Review the Electrical Observation Program form for accuracy and ensure that it identifies all work requiring Electrical Observation. Complete any missing information (i.e., project and/or permit numbers) if known and indicate on the permit(s) "Electrical Observation Required". The Electrical Observation form shall be processed before permit issuance.

CITY ELECTRICAL INSPECTOR: Review the Electrical Observations Program form for the name of the registered design professional responsible for the Electrical Observation Program. Address any Electrical Observation concerns of the Electrical Observer(s). Attend any necessary job conference related to Electrical Observation procedures. Review all required Electrical Observation and final reports.

ELECTRICAL OBSERVATION: The registered design professional responsible for the Electrical Observation shall complete a signed written report after each site visit requiring Electrical Observation. The Electrical Observer(s) shall ensure that all reports are posted with the permit at the job site and are available to the City of Phoenix Electrical Inspector for review. All deviations from the approved plans or specifications shall be brought to the immediate attention of the contractor for correction and, if uncorrected, to the responsible registered design professional and to the City of Phoenix Electrical Inspector.

The Electrical Observer shall submit a final signed report to the registered design professional and to the City of Phoenix Electrical Inspector providing final test results and stating whether the items requiring Electrical observation were, to the best of the observer's knowledge, in compliance with the approved plans and specifications and applicable workmanship provisions of the code. Final inspections approval and/or issuance of the Certificate of Occupancy will not occur until all Electrical Observation reports have been received and accepted by the City of Phoenix Electrical Inspector.

Section 1704.7 General.

1. Installation or alteration of the portion of health care facility electrical systems which falls within the scope of Article 517 of the National Electrical Code, including such systems installed in facilities where outpatient surgical procedures are performed.
2. Installations or alteration of electrical systems over 600V.
3. Installation or alteration of electrical systems within locations classified as hazardous by provisions of the National Electrical Code, except for gasoline dispensing installations and systems located within storage garages, repair garages or lubritoriums.
4. When such observation is specifically required by the Building Official.

2018 IECC

- Lighting controls
  - Manual controls
  - Light reduction controls
- Additional Controls
  - Automatic time switch controls
  - Occupancy sensors
  - Daylight zone control

PLANNING & DEVELOPMENT
PRESERVE
SHAPE
BUILD

2018 IECC

- Interior lighting power requirements.
  - A building complies with this section if its total connected lighting power calculated under Section C405.3.1 is not greater that the interior lighting power calculated under Section C405.3.2.

Lighting energy allowed ≥ Actual wattages of all light fixtures

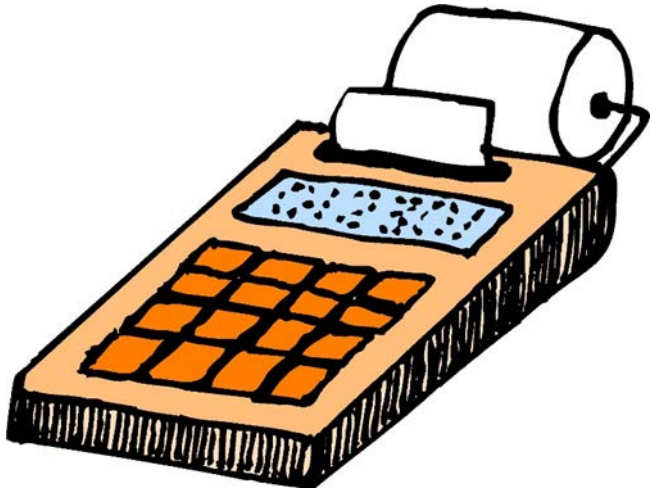

PLANNING & DEVELOPMENT
PRESERVE
SHAPE
BUILD

2018 IECC

- Exterior building lighting power. C405.4
  - The total exterior lighting power allowance for all exterior building applications is the sum of the base site allowance plus the individual allowances for the applicable lighting zone. Tradeoffs are allowed only in the Tradable Surfaces section.

Lighting energy allowed ≥ Actual wattages of all light fixtures

PLANNING & DEVELOPMENT
PRESERVE
SHAPE
BUILD

Oil Insulated Transformer Location

- Buildings must be protected from a fire in Oil-Insulated Transformers.
- Space separation based on construction type is typical method.
- If transformers need to be located closer than 25 feet from the building, design needs to address building protection.
- See Outdoor Oil-Insulated Transformer Interpretation and address on plans.

PLANNING & DEVELOPMENT
PRESERVE
SHAPE
BUILD

https://www.phoenix.gov/pddsite/Documents/TRT/dsd_trt_pdf_00449.pdf

City of Phoenix
PLANNING & DEVELOPMENT DEPARTMENT

Transformers, Outdoor Oil Insulated
Interpretation

Issue Date	January 2009; Revised March 2019
Code/Section	2017 NEC 450.27
Approved:	Technical Review Team
Developed By:	Rob Runge
References:	Factory Mutual Global Property Loss Prevention Data Sheet 5-4 2017 NEC Article 450.27, 2018 IBC, IEEE 979

Issue:

NEC 450.27 states: "Combustible material, combustible buildings, and parts of buildings, fire escapes, and door and window openings shall be safeguarded from fires originating in oil-insulated transformers installed on roofs, attached to or adjacent to a building or combustible material.

In cases where the transformer installation presents a fire hazard, one or more of the following safeguards shall be applied according to the degree of hazard involved: (1) Space separations, (2) Fire-resistant barriers, (3) Automatic fire suppression systems, (4) Enclosures that confine the oil of a ruptured transformer tank …"

Questions arise as to how to consistently enforce this code section. How close can an oil-insulated transformer be to a building before it is considered a hazard?

Interpretation:

Since this code section is not prescriptive, the judgment of the design professional is intended to be relied upon to determine the hazard involved as well as the required safeguards necessary for the project specific case. For code enforcement purposes, sufficient justification must be presented to show that the specific hazards have been evaluated and safeguarded against.

Note: This guideline is intended to apply to all Oil-Insulated Transformers installed outdoors, including utility owned and/or customer owned transformers. The following methods are considered acceptable justification:

1. Use of a widely accepted, nationally recognized standard, (acceptable to the AHJ), which gives specific separation distances, with respect to construction type, and containment requirements. A commonly used standard of this type is the FM Global Property Loss Prevention Data Sheet 5-4 for transformers. For example: FM gives minimum horizontal and vertical separation distances based on type and quantity of oil and type of construction. Other similar standards, such as IEEE 979, may be utilized if found acceptable to the AHJ.

For more information or for a copy of this publication in an alternate format, contact Planning & Development at (602) 262-7811 voice or TTY use 7-1-1.

2. A fire hazard study, performed by a professional registrant in the State of Arizona who is competent to determine the hazards involved with a fire involving oil-insulated transformers in proximity to combustibles. The fire hazard study method is required to be submitted as a Code Modification per IBC 104.10. Equivalence, in accordance with nationally recognized standards, must be shown based on the hazards, materials and fire ratings of the building construction.

Consideration must be given to building construction type/fire-resistive rating, wall and roof openings within required separation distances, proximity to means of egress doors, fire resistant barriers, etc.

- Ideally, space separation (as described in the FM Data Sheet) would be employed as the safeguarding means with design of the adjacent building conforming to the construction ratings indicated. If these distances cannot be attained, additional safeguarding means must be employed such as fire resistant barriers and/or fire suppression systems. As interpreted by FM, openings such as doors and windows located in the wall that is adjacent to the oil-insulated transformer will be required to maintain the same construction rating required for the wall.
- Typically, containment would be required unless the finished grade slopes away from the building where the transformer is located. Note: Containment may also be required as a condition of the fire hazard study.
- Elements of the means of egress such as exit doors, exit courts, exterior stairs, etc. shall be a minimum of 10' from the oil-insulated transformer (based on IBC Sections 1021.4 and 1027.5).

Unless other means are justified, as described in the above methods, the following minimum space separation distances will be used to verify compliance with NEC 450.27:

For Three-Phase Transformers:

	Provide rating to 25' vertical height Minimum Horizontal Distance to Building		
Construction type	2-hour	Non-Combustible	Combustible
Less than 500 gallons	5'	15'	25'

For Single-Phase Transformers:
Less than 100 gallons, 10' minimum horizontal distance to combustible construction

Basic Guidance for Transformer Proximity to Building

Three-Phase Transformers:

Provide building construction / fire rating to 25’ vertical height when installed within the horizontal distance indicated below.

	Minimum Horizontal Distance to Building		
Building construction type	2-hour	Non-Combustible	Combustible
Less than 500 gallons of oil	5’	15’	25’

For Single-Phase Transformers:

Less than 100 gallons; 10’ minimum horizontal distance to combustible construction.

PLANNING & DEVELOPMENT
PRESERVE
SHAPE
BUILD

Basic Guidance for Transformer Proximity to Building

Means of Egress:

Elements of the means of egress such as exit doors, exit courts, exterior stairs, etc. shall be a minimum of 10’ from the oil-insulated transformer (based on IBC Sections 1021.4 and 1027.5).

Alternative acceptance:

Use of a fire protection engineer’s sealed evaluation/drawings when transformer proximity is within the horizontal distances indicated in paragraphs a and b above. Safeguards stipulated in the evaluation must be shown in the design drawings for the project.

PLANNING & DEVELOPMENT
PRESERVE
SHAPE
BUILD

https://www.phoenix.gov/pddsite/Documents/TRT/dsd_trt_pdf_00710.pdf

ELECTRICAL DRAWINGS

Sealed by an electrical engineer registered in the State of Arizona or by another registrant as permitted in PBCC 107.1

2017 National Electrical Code (NEC)

1. **Architectural Plans**
   - ☐ Find occupancy group, square footage, construction type, # of exits required, and intended use.
   - ☐ Determine where the building is located on the site, the proximity to other structures, the quantities of buildings to be reviewed, etc.

2. **Site Plan**
   - ☐ Utility Transformer location(s), # of services per transformer, proximity of oil-insulated transformer(s) to building. Note: if transformer is located within 25' of building, see NEC Section 450.27 and Interpretation – "Transformers, Outdoor Oil-Insulated."
   - ☐ Service location(s), # of services per building. NEC Section 230.2
   - ☐ Exterior lighting and power circuiting and controls
   - ☐ Exterior energy calculations. 2018 IECC C405.4
   - ☐ Signage. NEC Article 600
   - ☐ Circuiting – Check conductor sizes vs. load and breaker or fuse sizes. NEC 310.15(B)(16), 240.4, 110.14(C) Equipment grounding conductor sized per NEC 250.122. Conduit sized per NEC Chapter 9, Tables 4 & 5

3. **Lighting Plan(s)**
   - ☐ Circuiting – Check conductor sizes vs. load and breaker or fuse sizes. NEC 310.15(B)(16), 240.4, 110.14(C). Equipment grounding conductor sized per NEC 250.122. Conduit sized per NEC Chapter 9, Tables 4 & 5
   - ☐ Controls
     - ☐ Manual controls. 2018 IECC C405.2.5
     - ☐ Light reduction controls. 2018 IECC C405.2.2.2
     - ☐ Automatic lighting shutoff. 2018 IECC C405.2.1 & C405.2.2
     - ☐ Daylight zone control. 2018 IECC C405.2.3
   - ☐ Interior energy calculations. 2018 IECC C405.3
   - ☐ Means of egress lighting (normal) and (emergency). 2018 IBC 1008.1, 2, 3 & NEC Article 700
   - ☐ Take note of any line-voltage track for feeder load calculations. NEC Section 220.43(B)

4. **Power Plan(s)**
   - ☐ Circuiting - Check conductor sizes vs. load and breaker or fuse sizes. NEC 310.15(B)(16), 240.4, 110.14(C) Equipment grounding conductor sized per NEC 250.122. Conduit sized per NEC Chapter 9, Tables 4 & 5
   - ☐ GFCI per NEC Article 210.8
   - ☐ Electrical distribution equipment layouts – Working space NEC 110.26
   - ☐ Classified locations, NEC Articles 500 - 517, – identified on plan, electrical equipment and wiring methods within classified locations properly rated. (Also verify rating of lighting within or above classified locations)
   - ☐ Review mechanical & plumbing equipment power, circuiting, OCPD sizes, loads, disconnecting means (Note: may be on separate power plans). Review mechanical and plumbing equipment schedules vs. load information shown in panel schedules and load calculations
   - ☐ Review other equipment power, such as kitchen equipment, circuiting, OCPD sizes, loads, disconnecting means

5. **One-Line Diagram(s)**
   - ☐ If more that one service is serving a building, verify that the design meets one of the conditions in NEC 230.2 permitting more than one service
   - ☐ Verify building disconnecting means are provided for each building in scope. NEC 230.70 or 225.31
   - ☐ Verify electrical distribution equipment ratings, (voltage, phase, wire, ampacity, AIC, enclosure). Check ampacity of distribution equipment vs. load shown in load calculations
   - ☐ Verify if GFP is required and indicated. NEC 230.95, 215.10
   - ☐ Check feeder sizes, (line, neutral, and grounding conductors, and conduit). Verify that loads do not exceed conductor ampacity
   - ☐ Check OCPD (fuses, breakers) sizes and types. Verify that loads do not exceed OCPD ratings. Verify that OCPD's properly protect conductors and equipment
   - ☐ Check grounding and bonding of service(s), transformer(s), generator(s), etc. per NEC Article 250
   - ☐ Review any NEC Article 700, 701, and 702 systems indicated. Verify separation as required by code
   - ☐ Review Essential Electrical Systems for health care facilities per NEC Article 517
   - ☐ Verify if Special Electrical Inspection or Electrical Observation is required. Review Special Inspection or Observation form for completeness

6. **Check load calculations.**
   - ☐ Load calculations are required for all distribution equipment (up to and including the SES) affected by the load for the project.

7. **Check fault calculations**
   - ☐ Identify utility company. (APS or SRP)
   - ☐ Verify that AFC shown at the SES is no less than that shown in the utility company tables. Note: tables are based on one transformer serving one service. If more that one service is served by a single transformer, the transformer will likely be larger (KVA) and consequently have a larger AFC at each service served. If two or more transformers are networked, the AFC will be much higher than the table value.
   - ☐ Check fault calculations to all panels, contactors, relays, etc. vs. AIC / SCCR rating indicated for same. Other equipment should also be checked, such as chillers, A/C units, elevator controllers, etc.

8. **Panel Schedules**
   - ☐ If multiwire branch circuits are present on plan drawings, verify compliance with 210.4(B)
   - ☐ Verify that any line-voltage track lighting is included in feeder calc for panel. NEC Section 220.43(B)
   - ☐ If show windows are identified in panel schedule, verify code required feeder load is included in load calculation for panel. NEC Section 220.43(A)
   - ☐ Sign circuit required by NEC Section 600.5(A) must have a minimum load per NEC Section 220.14(F)
   - ☐ Panel schedules should include: breaker ratings, circuit loads, description of loads, panel ratings, (voltage, phase, wire, ampacity, AIC, enclosure), and panel load calculations
   - ☐ Verify that load shown does not exceed panel ampacity rating
   - ☐ Verify panel available fault current (AFC) from fault calculations does not exceed panel AIC rating, or that a series rated system is designed

City of Phoenix
PLANNING AND DEVELOPMENT DEPARTMENT

Plan Review Checklist
Electrical

Electrical Peer Review

- Electrical Peer Review is required for projects in the Random Audit category when the scope of the electrical work is greater than 400A and/or greater than 22,000A Available Fault Current, AFC.
- Projects that require an Automatic Audit do not require an Electrical Peer Review.

PLANNING & DEVELOPMENT
PRESERVE
SHAPE
BUILD

Common Code Violations – Typical Review Comments

- Identify utility company
- Available fault current based on utility company tables
- Service laterals may not be used in fault calculation
- Fault calculations missing
- AIC ratings missing

PLANNING & DEVELOPMENT
PRESERVE
SHAPE
BUILD

Common Code Violations – Typical Review Comments

- Load calculations missing
- Fire pump service connection
- Multiple services to a building
- Classified locations
- Grounding & Bonding

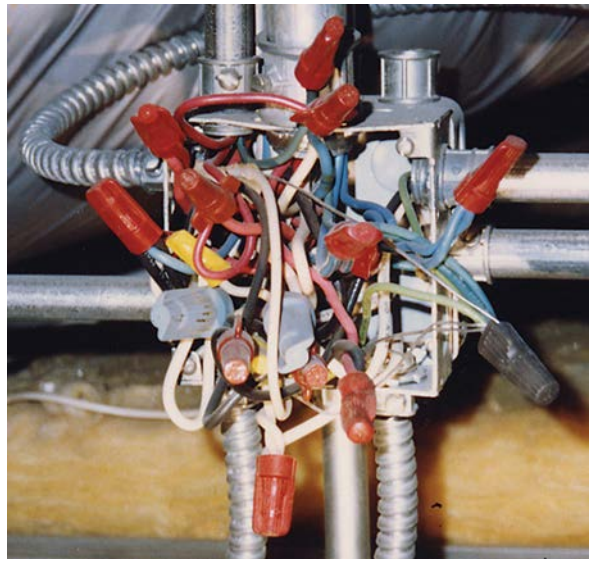

PLANNING & DEVELOPMENT
PRESERVE
SHAPE
BUILD

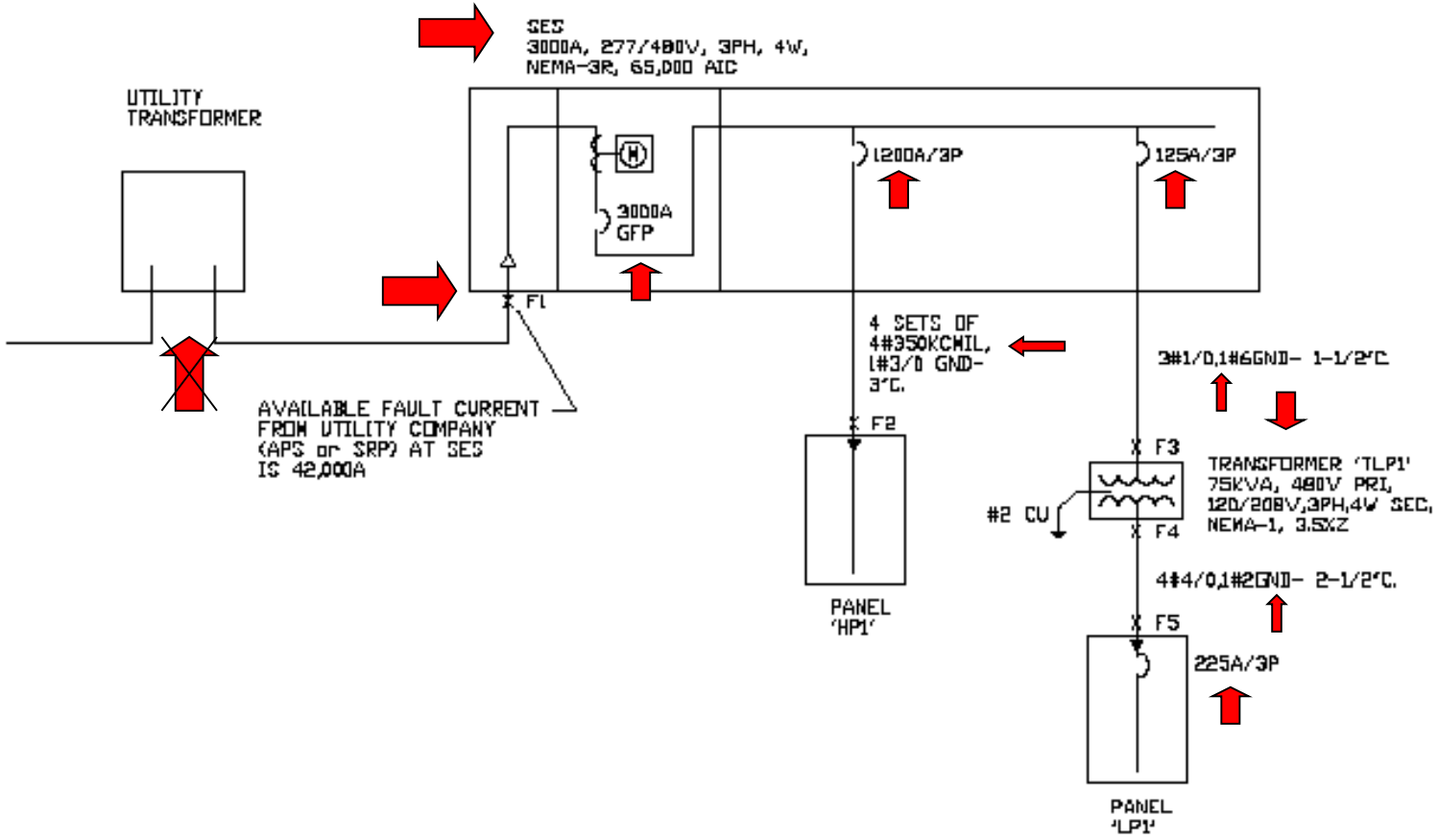

PLANNING & DEVELOPMENT
PRESERVE
SHAPE
BUILD

Questions?

PLANNING & DEVELOPMENT
PRESERVE
SHAPE
BUILD

Robert Runge
Electrical Plans Engineer,
Technical Lead
602-256-3556
robert.runge@phoenix.gov