City of Phoenix
PLANNING & DEVELOPMENT DEPARTMENT

Self-Certification: Elevators

Mike Moses – Elevator Inspections Field Supervisor

PLANNING & DEVELOPMENT
PRESERVE
SHAPE
BUILD

Elevator Codes – Adopted July 2018

- ASME, A17.1 – 2016 Safety Code for Elevators & Escalators
- ASME, A17.3 – 2015 Safety Code for Existing Elevators
- ASME A18.1 – 2016 Safety Std for Platform & Stairway Lifts
- ASME A17.6 – 2010 Std for Elevator Suspension & Compensation
- ASME A17.7 – 2007 Performance Based Safety Code for Elevators
- Currently Enforced IBC, NEC, Fire Alarm, Sprinkler & Plumbing Codes

PLANNING & DEVELOPMENT
PRESERVE
SHAPE
BUILD

Types of Elevators

Elevator Design Considerations

Passenger Elevator Components

Traction Elevator

- car
- cables
- elevator machine
- controls
- counterweight
- hoistway
- rails
- penthouse
- pit

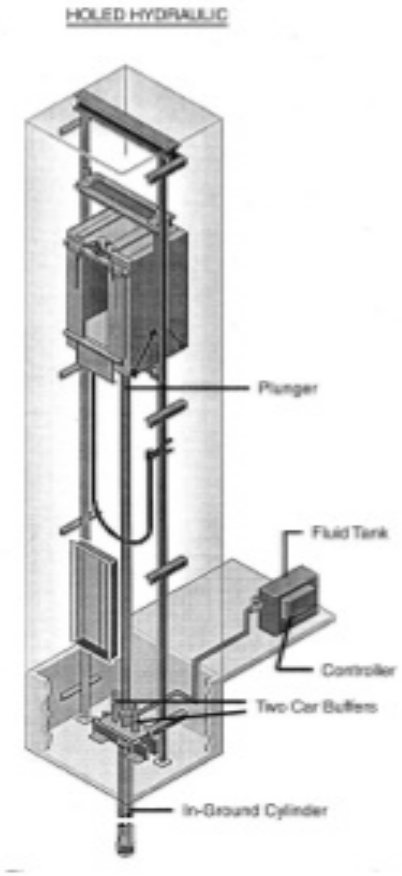

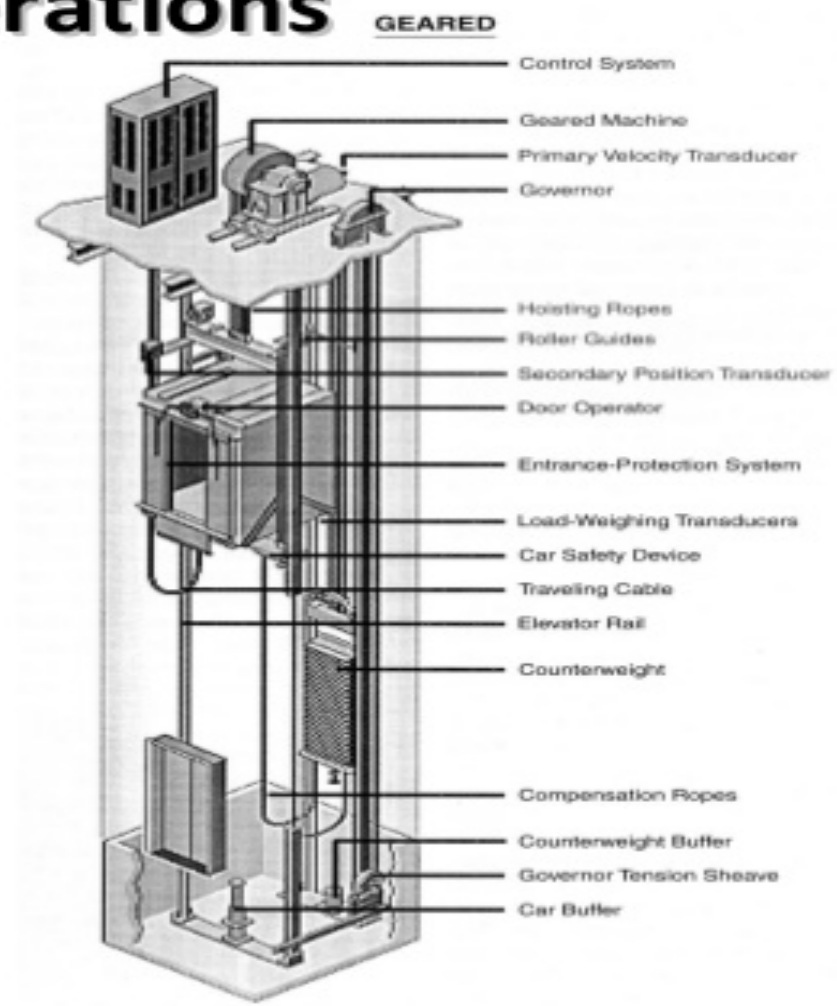

PLANNING & DEVELOPMENT
PRESERVE
SHAPE
BUILD

Hydraulic

Hydraulic Elevator Types

- **In-Ground:** This type has a cylinder that extends into the ground the same height to which the elevator is to be lifted.

- **Hole-Less:** This type uses telescoping pistons on one or both sides of the cab to lift it. The cylinder stands within the hoist way and does not require a drilled hole. This class is typically limited to under 40' of travel.

- **Roped:** This type is similar to a traction type elevator. The cab is elevated by an attached rope that is pulled by pistons.

No wires, cables, or overhead machinery is required for the In-Ground and Hole-less types. A machine room is required to house both the oil storage tank and the pump. The slow speeds of hydraulic elevators makes the ideal for freight elevators up to 50 tons.

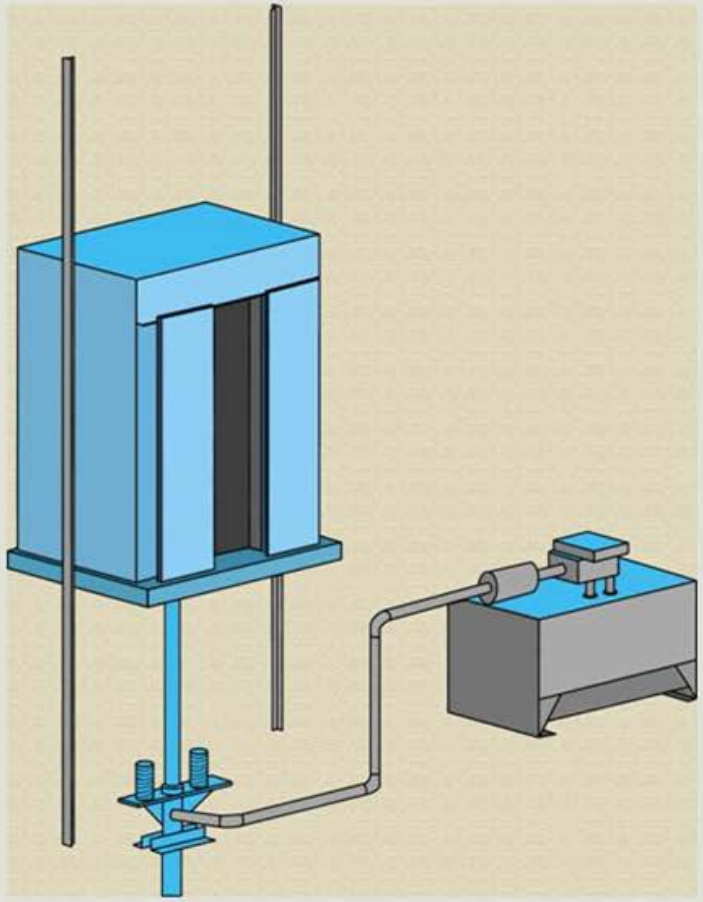

PLANNING & DEVELOPMENT
PRESERVE
SHAPE
BUILD

Traction Elevators

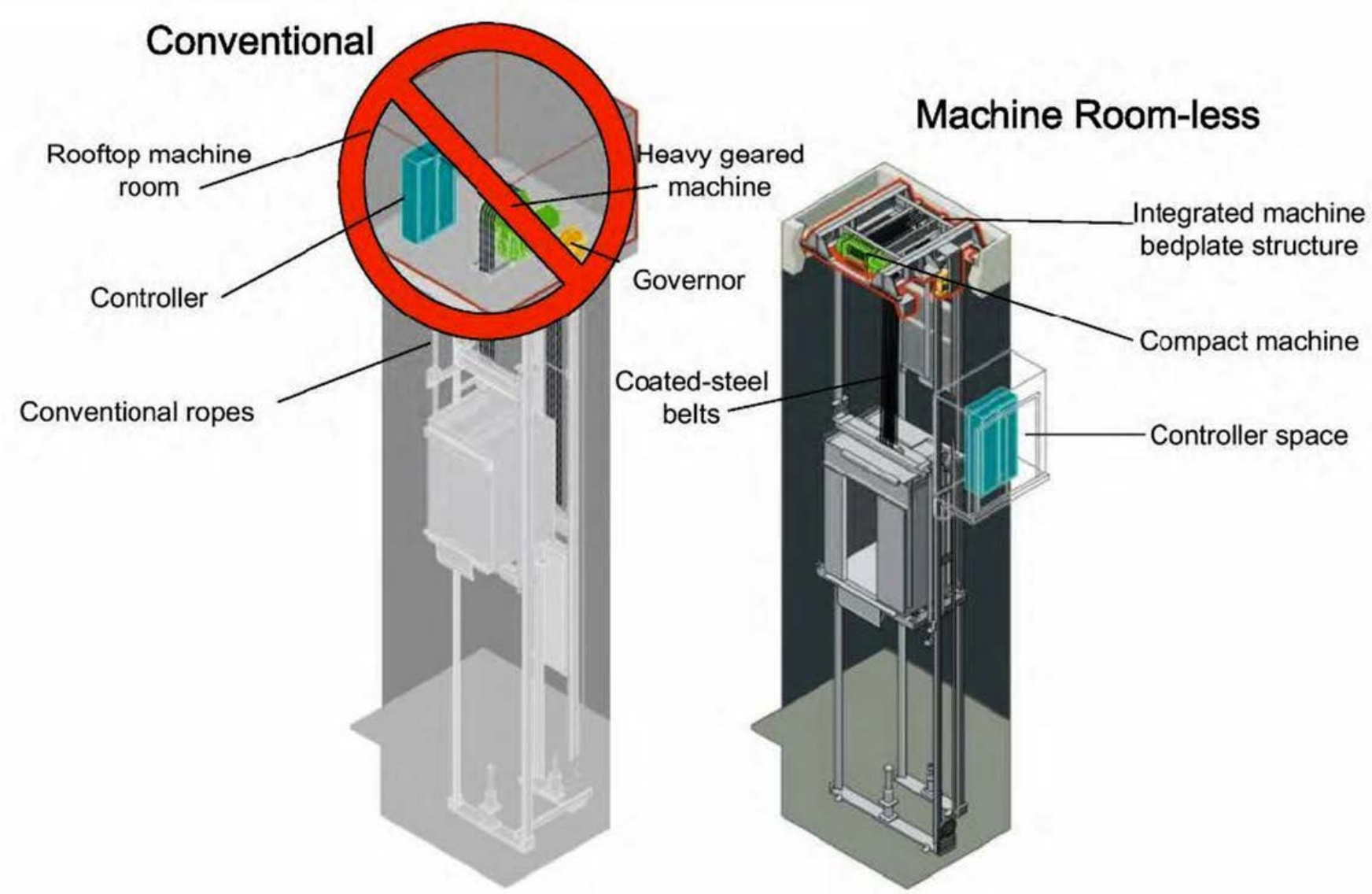

PLANNING & DEVELOPMENT
PRESERVE
SHAPE
BUILD

Machine Room Less (MRL) Elevators – Hyd & Traction

- MRL options include adjacent or remote full control room, closet control space, control space in hoistway, machine space in hoistway, or at least part of controls mounted in elevator jamb.
- Machine space in hoistway has same requirements as a machine room, GFIC, HVAC, lighting. Some components such as smoke detector, heat detector, sprinkler depend on model of elevator.

PLANNING & DEVELOPMENT
PRESERVE
SHAPE
BUILD

Plan Review Checklist - Elevators

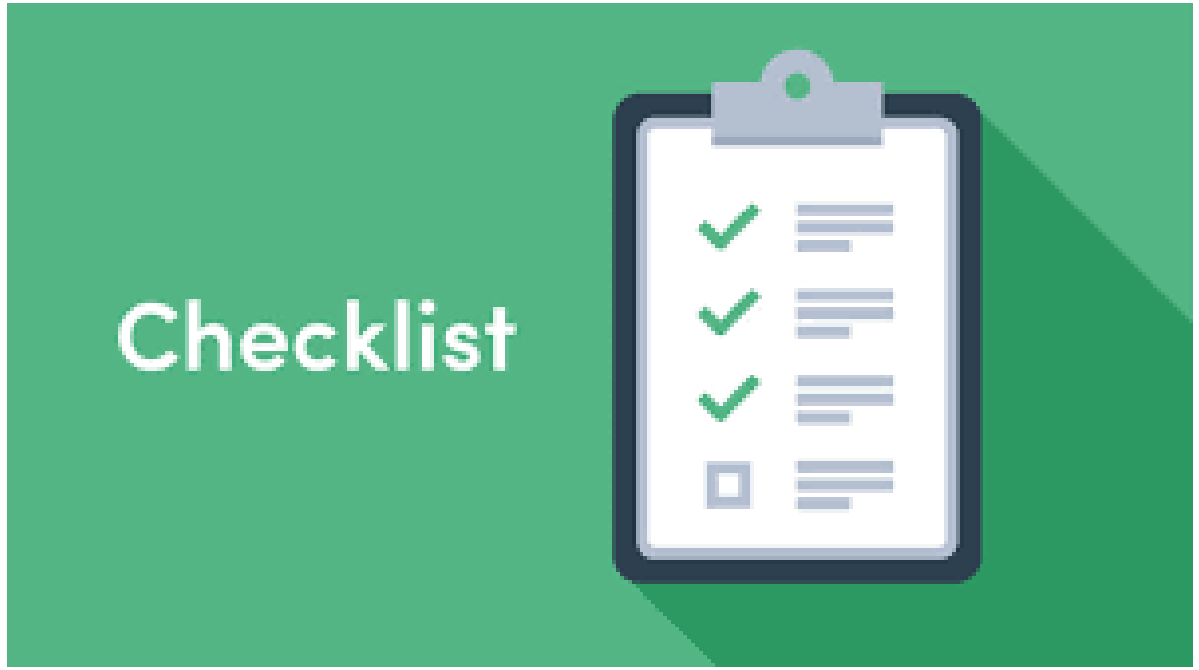

PLANNING & DEVELOPMENT
PRESERVE
SHAPE
BUILD

Plan Review Checklist – Elevators: *Architectural*

- **4 story requires stretcher elevator, IBC 3002.4**
- **Standby power requirements IBC 2702.2**
- **Fire rating of hoistway & control room, IBC 3006.2**
- **Sump pump well, A17.1, section 2.2.2**
- **Fire Service Access elevators IBC 3007**
- **Occupant Evacuation Operations IBC 3008**

PLANNING & DEVELOPMENT
PRESERVE
SHAPE
BUILD

Plan Review Checklist – Elevators: *Electrical*

- **Shunt trip, IBC 3005.5**
- **Sump pump circuit, NEC Article 620.85**
- **When standby power is supplied to elevator conditions must comply with NEC Article 701, Legally Required Standby Systems.**

PLANNING & DEVELOPMENT
PRESERVE SHAPE BUILD

Sprinkler Requirements A17.1; 2.8.3 and NFPA 13; 8.15.5

- **Hydraulic** – Sprinkler(s) in pit (Less than 24” from pit floor), machine room, control room, or control space. Smoke detector in top of hoistway when sprinkler in pit.

- **Traction –** Sprinkler(s) in machine room, control room, or control space only. ***Unless***: The unit has NON-RATED coated steel belts as a suspension means, then sprinklers required at top of hoistway and pit, with heat and smoke detectors per NFPA 13 – 2013.

- **Traps and Shutoff Valves**

  Shall be provided in accessible locations outside the hoistway

PLANNING & DEVELOPMENT
PRESERVE
SHAPE
BUILD

Plan Review Checklist – Elevators: *Plumbing & Mechanical*

- **Sump pump discharge,300 gal/hr A17.1, 2.2.2.4, 2006 UPC 710.4**
- **Sprinkler head location, NFPA 13**
- **Equipment space HVAC, IBC 3005**

PLANNING & DEVELOPMENT
PRESERVE SHAPE BUILD

2018 IBC

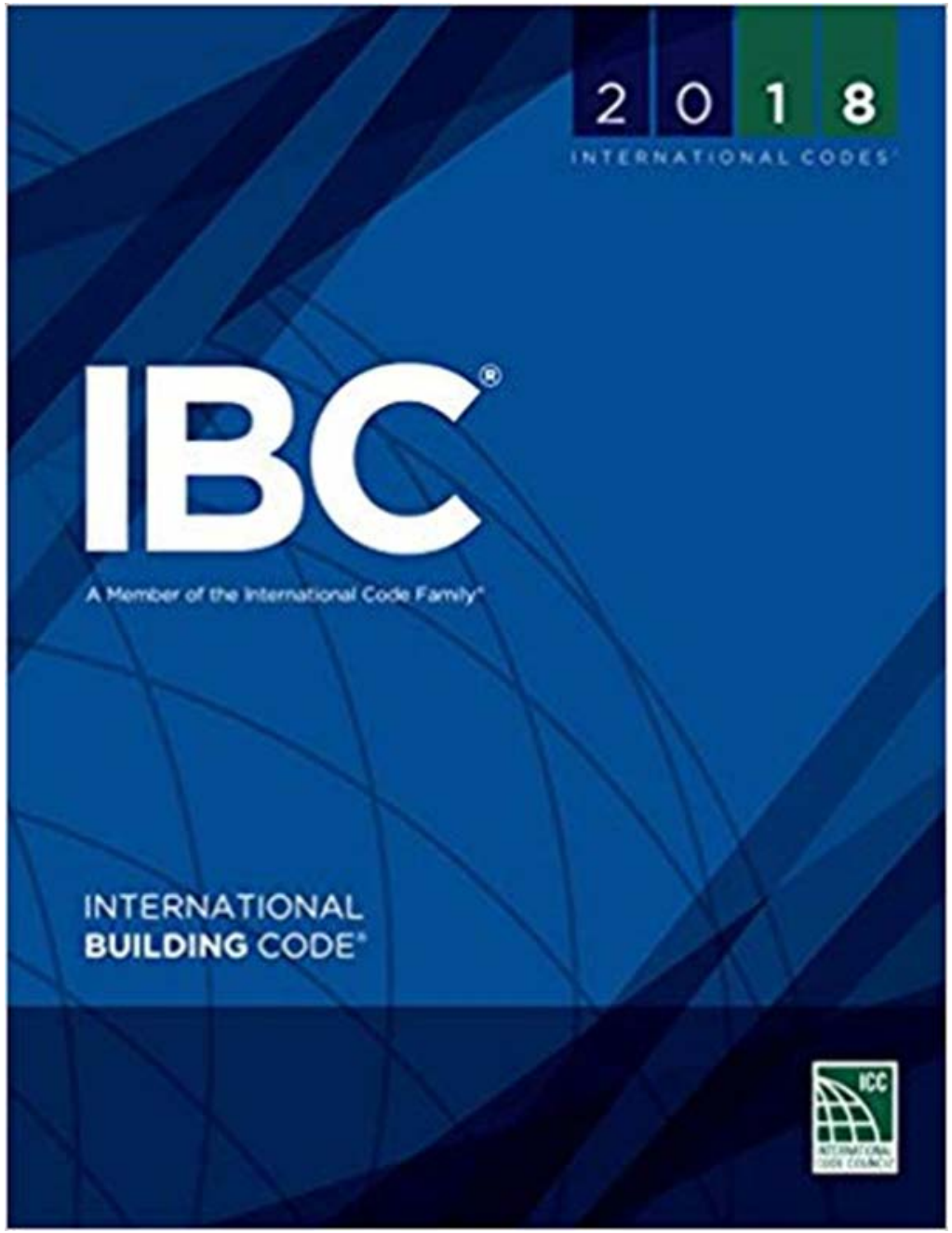

PLANNING & DEVELOPMENT
PRESERVE
SHAPE
BUILD

City of Phoenix Amendments to the 2018 International Building Code

- **3002.4 Elevator car to accommodate ambulance stretcher.** Where elevators are provided in buildings four or more stories above or four or more stories below, grade plane, at least one elevator shall be provided for fire department emergency access and emergency medical access to all floors. All elevators that require emergency medical access shall be in accordance with 3002.4.1 through 3002.4.5.

- **3002.4.1 Size of the emergency access elevator (EMS) cab.** The elevator car shall be of such a size and arrangement to accommodate ambulance stretcher 24-inch by 84-inch (610mm by 2134mm) with not less than 5-inch (127mm) radius corners, in the horizontal, open position.

PLANNING & DEVELOPMENT
PRESERVE
SHAPE
BUILD

City of Phoenix Amendments to the 2018 International Building Code

- **3003 Emergency Operations**

- **3003.1.4 Venting** Where standby-power is connected to elevators, the machine room, ventilation or air conditioning machine space, control room or control space air conditioning shall be connected to the stand-by power.

PLANNING & DEVELOPMENT
PRESERVE
SHAPE
BUILD

City of Phoenix Amendments to the 2018 International Building Code

- **3005.2 Venting (Air Conditioning)**

- Elevator machine rooms, machinery spaces, control rooms and control spaces that contain solid state equipment for elevator operation shall be provided with an independent air-conditioning system to protect against the overheating of electrical equipment. The system shall be capable of maintaining temperatures not greater than 90 degrees, to ensure normal operation of the elevator.

- Air conditioning equipment shall not be located directly above elevator equipment or in the elevator hoistway (A17.1, 2.8.5.1)

- Means shall be provided to collect and drain condensation water from these spaces. Condensation drains shall not be located directly above elevator equipment. Drains connected directly to sewers shall not be installed. (A17.1, 2.8.5.3)

PLANNING & DEVELOPMENT
PRESERVE
SHAPE
BUILD

2018 IBC Fire Service Access Elevator, Section 3007

- Occupied floor more than 120’ above the lowest level of fire department vehicle access
- No fewer than two, or all, whichever is less
- Capacity not less than 3500#
- Shaft enclosure complying with section 708 (Fire partitions)
- Shaft integrity complying with 403.2.3.1 through 403.2.3.4 (Wall assemblies – Meet or exceed)

PLANNING & DEVELOPMENT
PRESERVE
SHAPE
BUILD

2018 IBC Fire Service Access Elevator, Section 3007

- Special 2-hour protection of wiring or cables (all lines outside shaft)
- Fire service access elevator lobby shall have direct access to an enclosure for an interior exit stairway
- Hoistway lighting – 1 ftc throughout hoistway
- Special requirements for lobbies
- Approved method to prevent water from infiltrating into the hoistway
- Recall is different

PLANNING & DEVELOPMENT
PRESERVE
SHAPE
BUILD

2018 IBC Occupant Evacuation Operation Elevators, Section 3008

- Buildings 420’ in height and up may, in lieu of required additional stairway, install occupant evacuation elevators.
- Shaft enclosure complying with section 713 (Shaft enclosures).
- Shaft integrity complying with 403.2.3.1 through 403.2.3.4 (Wall assemblies – Meet or exceed).
- Special protection of wiring or cables (All lines outside shaft).

PLANNING & DEVELOPMENT
PRESERVE
SHAPE
BUILD

2018 IBC Occupant Evacuation Operation Elevators, Section 3008

- Approved method to prevent water from infiltrating into the hoistway
- Occupant evacuation elevator lobbies shall have direct access to an enclosure for an interior exit stairway
- Recall is different
- Special lobbies*

PLANNING & DEVELOPMENT
PRESERVE
SHAPE
BUILD

Questions?

Mike Moses
Elevator Supervisor
Cell: 602-501-1329
Michael.Moses@phoenix.gov

Rick Surratt
Building Code Examiner (Elevators)
Cell: 602-501-1409
Richard.Surratt@phoenix.gov

PLANNING & DEVELOPMENT
PRESERVE
SHAPE
BUILD