Energy Code Training

John Brean, P.E.

Mechanical Plans Engineer

PLANNING & DEVELOPMENT
PRESERVE
SHAPE
BUILD

Overview

- Code Resources
- Applicability
- Compliance methods
- Areas of concentration
- Specific code requirements
- Common mistakes
- Summary

PLANNING & DEVELOPMENT
PRESERVE
SHAPE
BUILD

Code Resources

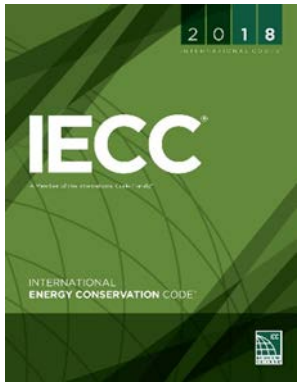

- 2018 International Energy Conservation Code (IECC) is split into a commercial section and a residential section
- Commercial buildings to meet 2018 IECC or by reference the ASHRAE Standard 90.1-2010 *Energy Standard for Buildings Except Low-Rise Residential Buildings*
- *Residential buildings to meet the 2018 IECC*
- Both sections of the IECC have mandatory items, prescriptive items, and a performance path to compliance.
- City of Phoenix Energy Code Amendments area located at:

  https://www.phoenix.gov/pdd/codes-ordinances

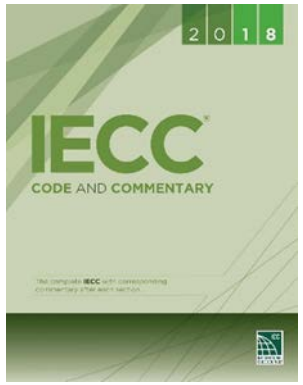

ICC Web Site: www.iccsafe.org
Support: 1-888-422-7233, ext. 33822
e-mail: support@ecodes.biz
Electronic Media Store: www.ecodes.biz

ICC Code Interpretation
Support: 1-888-422-7233 x4444

PLANNING & DEVELOPMENT
PRESERVE
SHAPE
BUILD

Energy Code Applicability for Commercial Buildings

- New construction and work meet the 2018 IECC
- Change in use or occupancy that results in an increase in energy usage
- Buildings altered to become conditioned space
- Historic buildings on National, State or local register of historic places are exempt
- Low energy use buildings less than 3.4 Btu/hr ft^2 or 1.0 W/ft^2 of floor area and buildings with no conditioned space are exempt from thermal envelope requirements
- Additions, alterations, renovations or repairs to an existing building shall comply

PLANNING & DEVELOPMENT
PRESERVE
SHAPE
BUILD

Building Types

- Residential defined in IECC as detached one- and two-family dwellings, townhouses, as well as R-2, R-3 and R-4 buildings three stories or less in height above grade plane
- All other buildings are considered commercial
- Phoenix has amendment to allow for R-2 buildings of any height to choose either residential or commercial IECC provisions

PLANNING & DEVELOPMENT
PRESERVE
SHAPE
BUILD

Multi-Family Buildings

- **Commercial Compliance path**
  - Building envelope, HVAC, Water Heating & Lighting requirements per IECC C401.2 (prescriptive) or C407 (performance).
  - Natural or mechanical ventilation requirements of Chapter 4 of 2018 IMC per C403.2.2
  - HVAC or lighting additional efficiency option per C406.1

OR

- **Residential Compliance path**
  - Building envelope, Systems and Lighting requirements per IECC R401.2
  - Air leakage limits of less than 5 ACH and blower door testing per R402.4.1.2
  - Mechanical ventilation requirements of 2018 IMC per C403.2.2

PLANNING & DEVELOPMENT
PRESERVE
SHAPE
BUILD

Compliance Methods

- Simplest way is to detail all *prescriptive* requirements on the construction drawings
- Submit a signed compliance certificate from approved software such as COM*check™ ****
- Provide verification of compliance with an above code program such as LEED
- Submit an engineer prepared and sealed *performance* report detailing annual costs of building operation

*** Must meet the minimum prescriptive requirements and not accepted for performance method, After November 1, 2016 new amendment will allow trade-off compliance.

PLANNING & DEVELOPMENT
PRESERVE
SHAPE
BUILD

Commercial Building Areas of Concentration

- Application (C401)
- Building Envelope (C402)
- Building Mechanical Systems (C403)
- Service Water Heating (C404)
- Electrical Lighting and Power Systems (C405)
- Additional Efficiency Package Options (C406)

PLANNING & DEVELOPMENT
PRESERVE
SHAPE
BUILD

IECC C401 - General

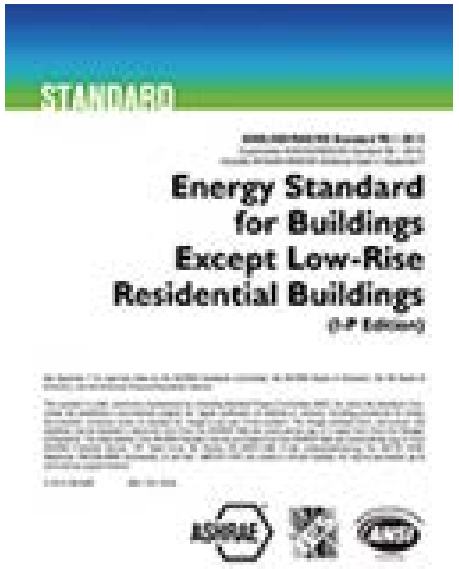

Commercial buildings shall comply with one of the following:

1. ANSI/ASHRAE/IESNA 90.1
2. Prescriptive Path: Use of prescriptive tables, mandatory items, and additional efficiency options
3. Performance Path: Trade-offs and mandatory items. The building annual energy cost shall be equal to or less than 85% of the standard reference design building

PLANNING & DEVELOPMENT
PRESERVE
SHAPE
BUILD

IECC C402 - Building Envelope Requirements on Plans

Building envelope requirements in the 2018 IECC

- Roofs, above - grade walls and floor insulation R-values and U-factors
- Roof solar reflectance and thermal emittance
- Fenestration thermal transmittance (U-factors) and solar heat gain coefficients (SHGC)
- Air sealing techniques, duct sealing, duct and pipe insulation

PLANNING & DEVELOPMENT
PRESERVE
SHAPE
BUILD

IECC C402 - Building Envelope Definitions

U-factor – Overall Heat Transfer Coefficient, measures how well a material or a series of materials resists heat flow, the lower the value the better, Table C402.1.3

- Outdoor air film
- Metal siding
- Continuous insulation
- Wood studs
- Cavity insulation
- Gypsum board
- Inside air film

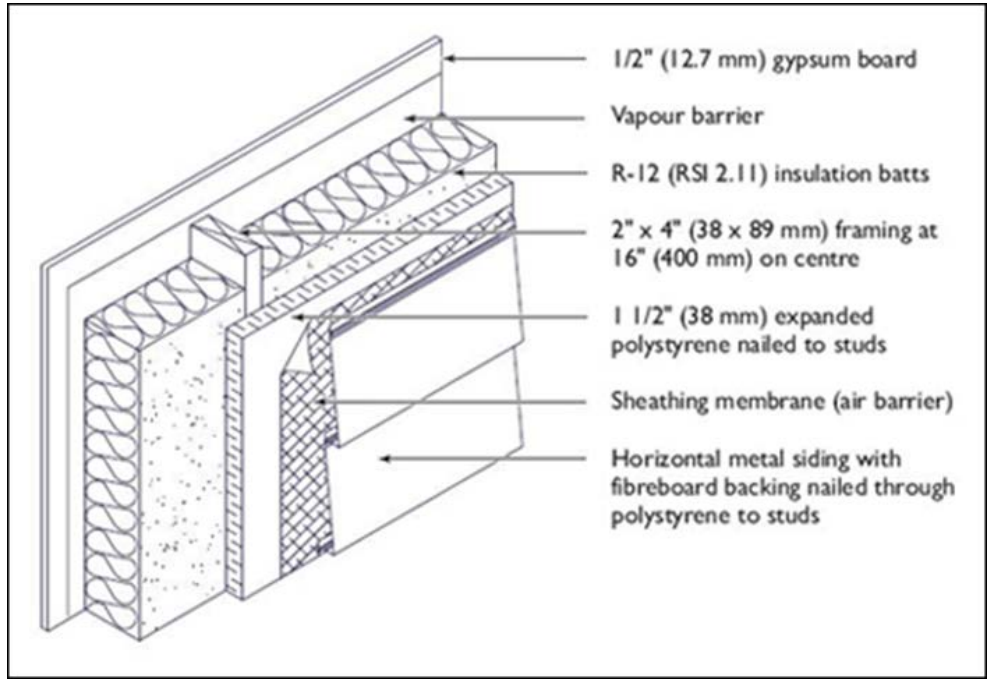

PLANNING & DEVELOPMENT
PRESERVE SHAPE BUILD

IECC C402 - Building Envelope Definitions Continued

R-value – Resistance Factor, measures how well an insulating material resists heat flow

- Batt insulation versus continuous
- the higher the R-value the better
- different material R-values can be added
- insulating sheathing must be minimum R-2
- other materials such as sheetrock are not included
- Table C402.1.3 with Climate Zone 2

PLANNING & DEVELOPMENT
PRESERVE
SHAPE
BUILD

IECC C402.1.3 - Building Envelope

TABLE C402.1.3
OPAQUE THERMAL ENVELOPE INSULATION COMPONENT MINIMUM REQUIREMENTS, R-VALUE METHOD[a, i]

CLIMATE ZONE	1		2		3		4 EXCEPT MARINE		5 AND MARINE 4		6		7		8	
	All other	Group R	All other	Group R	All other	Group R	All other	Group R	All other	Group R	All other	Group R	All other	Group R	All other	Group R
Roofs																
Insulation entirely above roof deck	R-20ci	R-25ci	R-25ci	R-25ci	R-25ci	R-25ci	R-30ci	R-30ci	R-30ci	R-30ci	R-30ci	R-30ci	R-35ci	R-35ci	R-35ci	R-35ci
Metal buildings[b]	R-19 + R-11 LS	R-19 + R-11 LS	R-19 + R11 LS	R-19 + R-11 LS	R-19 + R-11 LS	R-19 + R-11 LS	R-19 + R-11 LS	R-19 + R-11 LS	R-19 + R-11 LS	R-19 + R-11 LS	R-25 + R-11 LS	R-25 + R-11 LS	R-30 + R-11 LS	R-30 + R-11 LS	R-30 + R-11 LS	R-30 + R-11 LS
Attic and other	R-38	R-38	R-38	R-38	R-38	R-38	R-38	R-38	R-38	R-49	R-49	R-49	R-49	R-49	R-49	R-49
Walls, above grade																
Mass[g]	R-5.7ci[c]	R-5.7ci[c]	R-5.7ci[c]	R-7.6ci	R-7.6ci	R-9.5ci	R-9.5ci	R-11.4ci	R-11.4ci	R-13.3ci	R-13.3ci	R-15.2ci	R-15.2ci	R-15.2ci	R-25ci	R-25ci
Metal building	R-13+ R-6.5ci	R-13 + R-6.5ci	R13 + R-6.5ci	R-13 + R-13ci	R-13 + R-6.5ci	R-13 + R-13ci	R-13 + R-13ci	R-13 + R-13ci	R-13 + R-13ci	R-13 + R-13ci	R-13 + R-13ci	R-13 + R-13ci	R-13 + R-13ci	R-13+ R-19.5ci	R-13 + R-13ci	R-13+ R-19.5ci
Metal framed	R-13 + R-5ci	R-13 + R-5ci	R-13 + R-5ci	R-13 + R-7.5ci	R-13 + R-7.5ci	R-13 + R-7.5ci	R-13 + R-7.5ci	R-13 + R-7.5ci	R-13 + R-7.5ci	R-13 + R-7.5ci	R-13 + R-7.5ci	R-13 + R-7.5ci	R-13 + R-7.5ci	R-13 + R-15.6ci	R-13 + R-7.5ci	R-13+ R17.5ci
Wood framed and other	R-13 + R-3.8ci or R-20	R-13 + R-3.8ci or R-20	R-13 + R-3.8ci or R-20	R-13 + R-3.8ci or R-20	R-13 + R-3.8ci or R-20	R-13 + R-3.8ci or R-20	R-13 + R-3.8ci or R-20	R-13 + R-3.8ci or R-20	R-13 + R-3.8ci or R-20	R-13 + R-7.5ci or R-20 + R-3.8ci	R-13 + R-7.5ci or R-20 + R-3.8ci	R-13 + R-7.5ci or R-20 + R-3.8ci	R-13 + R-7.5ci or R-20 + R-3.8ci	R-13 + R-7.5ci or R-20 + R-3.8ci	R13 + R-15.6ci or R-20 + R-10ci	R13 + R-15.6ci or R-20 + R-10ci
Walls, below grade																
Below-grade wall[d]	NR	NR	NR	NR	NR	NR	R-7.5ci	R-7.5ci	R-7.5ci	R-7.5ci	R-7.5ci	R-7.5ci	R-10ci	R-10ci	R-10ci	R-12.5ci
Floors																
Mass[e]	NR	NR	R-6.3ci	R-8.3ci	R-10ci	R-10ci	R-10ci	R-10.4ci	R-10ci	R-12.5ci	R-12.5ci	R-12.5ci	R-15ci	R-16.7ci	R-15ci	R-16.7ci
Joist/framing	NR	NR	R-30	R-30	R-30	R-30	R-30	R-30	R-30	R-30	R-30	R-30[f]	R-30[f]	R-30[f]	R-30[f]	R-30[f]
Slab-on-grade floors																
Unheated slabs	NR	NR	NR	NR	NR	NR	R-10 for 24" below	R-10 for 24" below	R-10 for 24" below	R-10 for 24" below	R-10 for 24" below	R-15 for 24" below	R-15 for 24" below	R-15 for 24" below	R-15 for 24" below	R-20 for 24" below
Heated slabs[h]	R-7.5 for 12" below + R-5 full slab	R-7.5 for 12" below + R-5 full slab	R-7.5 for 12" below + R-5 full slab	R-7.5 for 12" below + R-5 full slab	R-10 for 24" below + R-5 full slab	R-10 for 24" below + R-5 full slab	R-15 for 24" below + R-5 full slab	R-15 for 24" below + R-5 full slab	R-15 for 36" below + R-5 full slab	R-15 for 36" below + R-5 full slab	R-15 for 36" below + R-5 full slab	R-20 for 48" below + R-5 full slab	R-20 for 48" below + R-5 full slab	R-20 for 48" below + R-5 full slab	R-20 for 48" below + R-5 full slab	R-20 for 48" below + R-5 full slab
Opaque doors																
Nonswinging	R-4.75	R-4.75	R-4.75	R-4.75	R-4.75	R-4.75	R-4.75	R-4.75	R-4.75	R-4.75	R-4.75	R-4.75	R-4.75	R-4.75	R-4.75	R-4.75

For SI: 1 inch = 25.4 mm, 1 pound per square foot = 4.88 kg/m^2, 1 pound per cubic foot = 16 kg/m^3.

ci = Continuous insulation, NR = No Requirement, LS = Liner System.

a. Assembly descriptions can be found in ANSI/ASHRAE/IESNA Appendix A.

b. Where using *R*-value compliance method, a thermal spacer block shall be provided, otherwise use the *U*-factor compliance method in Table C402.1.4.

c. *R*-5.7ci is allowed to be substituted with concrete block walls complying with ASTM C90, ungrouted or partially grouted at 32 inches or less on center vertically and 48 inches or less on center horizontally, with ungrouted cores filled with materials having a maximum thermal conductivity of 0.44 Btu-in/h-f^2 °F.

d. Where heated slabs are below grade, below-grade walls shall comply with the exterior insulation requirements for heated slabs.

e. "Mass floors" shall be in accordance with Section C402.2.3.

f. Steel floor joist systems shall be insulated to R-38.

g. "Mass walls" shall be in accordance with Section C402.2.2.

h. The first value is for perimeter insulation and the second value is for slab insulation. Perimeter insulation is not required to extend below the bottom of the slab.

i. Not applicable to garage doors. See Table C402.1.4.

FEEDBACK
LIVE CHAT

PLANNING & DEVELOPMENT
PRESERVE SHAPE BUILD

Overall Heat Transfer Coefficient

The total resistance to heat flow through a flat ceiling, floor, or wall is equal numerically to the sum of the resistance in series.

$R = R_1 + R_2 + R_3 + \ldots\ldots R_n$

Where R_1, R_2, etc. are the individual resistance of the wall components, and R is total resistance.

The Overall Heat Transfer Coefficient is defined by

$$U = 1/R$$

Heat transfer through a surface like a wall can be calculated as:

$$Q = U A \Delta T$$

Where

Q= heat transfer (Btu/h)

U = overall heat transfer coefficient (Btu/(ft^2 h ^{o}F) through surface

A = wall area (ft^2)

$\Delta T = (t_1 - t_2)$ = temperature difference over wall (^{o}F)

Typical wood framed commercial building would need R-38 attic insulation and R-20 wall insulation.

PLANNING & DEVELOPMENT
PRESERVE
SHAPE
BUILD

Overall Heat Transfer Coefficient – through a single plane wall

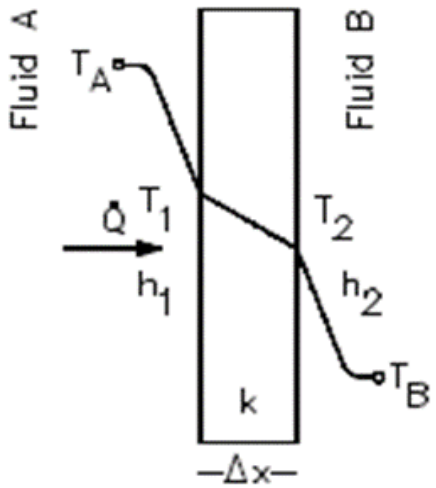

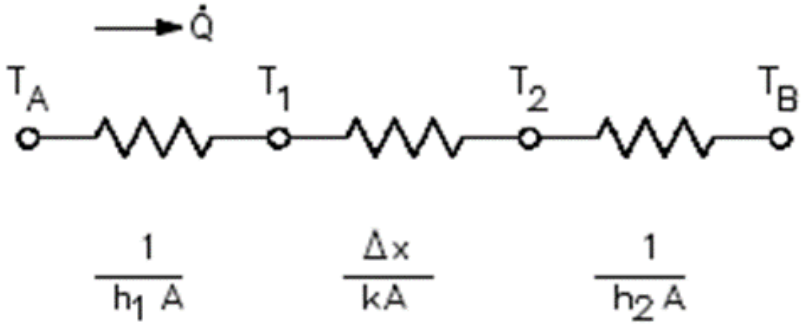

$$\dot{Q} = \frac{T_A - T_B}{1/h_1 A + \Delta x/kA + 1/h_2 A}$$

$$\dot{Q} = U_o A \Delta T_{overall}$$

$$U_o = \frac{1}{1/h_1 + \Delta x/k + 1/h_2}$$

Δx = Wall thickness
K = Thermal Conductivity of material in layer
h = The individual convection heat transfer coefficient for each fluid
A = Wall area
$R = R_1 + R_2 + R_3 + \ldots\ldots R_n$
U = 1/R
q = U A ΔT

Overall Heat Transfer Coefficient – through a multi-plane wall

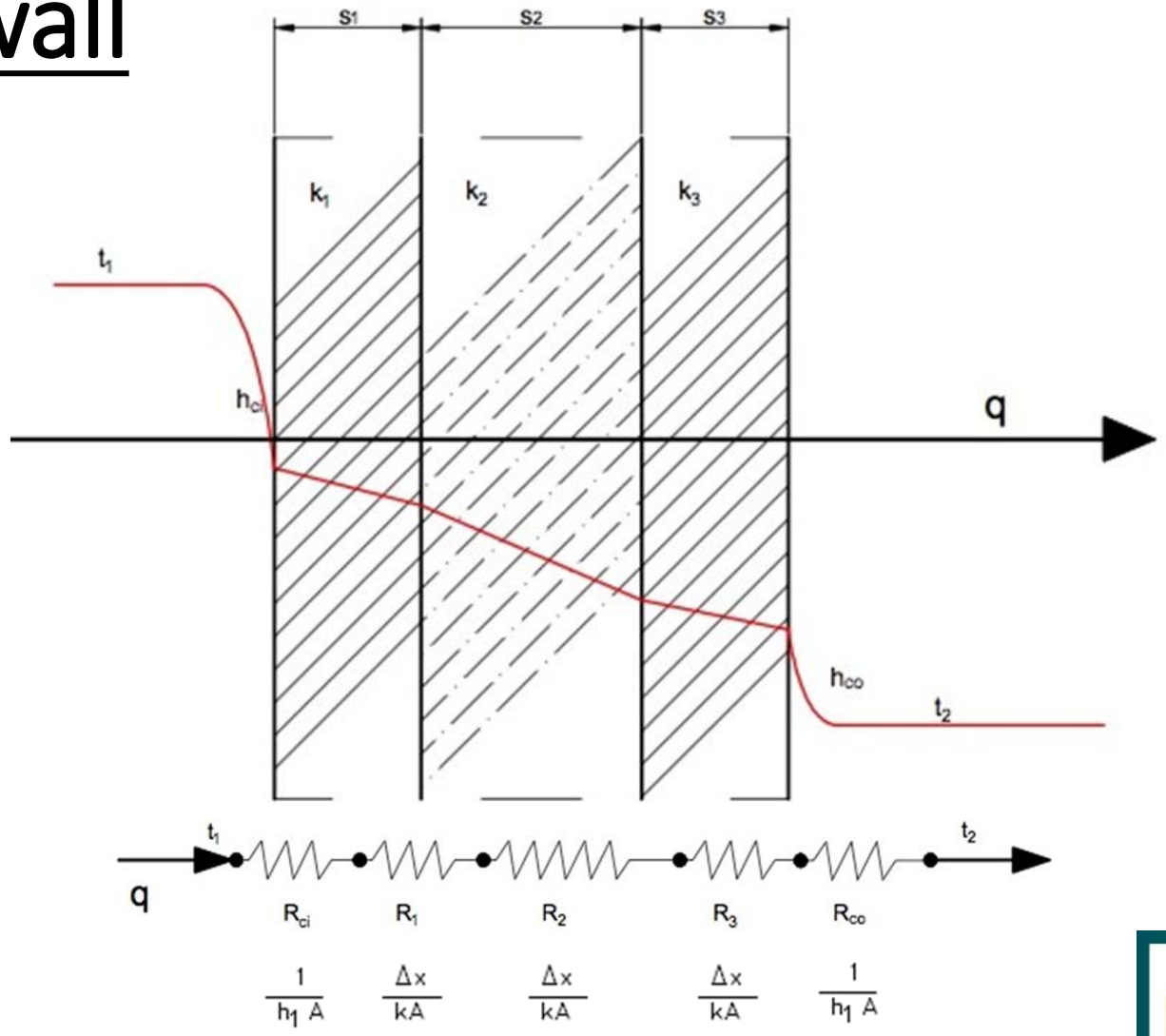

$R = R_1 + R_2 + R_3$

$\boldsymbol{U = 1/R}$

$\boldsymbol{Q = U\,A\,\Delta T}$

Overall Heat Transfer - through a wall and roof

Table 4C Coefficients of Transmission (U) of Frame Partitions or Interior Walls[a]

Coefficients are expressed in Btu per (hour) (square foot) (degree Fahrenheit difference in temperature between the air on the two sides), and are based on still air (no wind) conditions on both sides

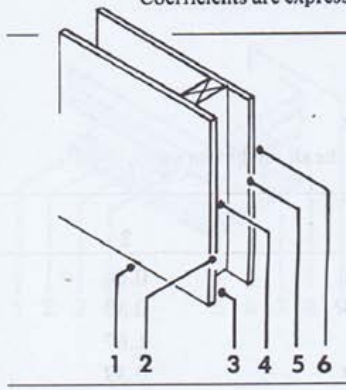

Replace Air Space with 3.5-in. R-11 Blanket Insulation (New Item 3)

Construction	1 Resistance (R) Between Framing	1 Resistance (R) At Framing	2 Resistance (R) Between Framing	2 Resistance (R) At Framing
1. Inside surface (still air)	0.68	0.68	0.68	0.68
2. Gypsum wallboard, 0.5 in.	0.45	0.45	0.45	0.45
3. Nonreflective air space, 3.5 in. (50 F mean; 10 deg F temperature difference)	1.01	—	11.00	—
4. Nominal 2-in. × 4-in. wood stud	—	4.38	—	4.38
5. Gypsum wallboard, 0.5 in.	0.45	0.45	0.45	0.45
6. Inside surface (still air)	0.68	0.68	0.68	0.68
Total Thermal Resistance (R)	R_i= 3.27	R_s= 6.64	R_i=13.26	R_s= 6.64

Construction No. 1: U_i= 1/3.27 = 0.306; U_s= 1/6.64 = 0.151. With 12% framing (typical of 2-in. × 4-in. studs @ 24-in. o.c.), U_{av}= 0.9 (0.306) + 0.12 (0.151) = 0.293

Construction No. 2: U_i = 1/13.26 = 0.075_6 U_s = 1/6.64 = 0.151. With framing unchanged, U_{av} = 0.9(0.075) + 0.1(0.151) = 0.083

Table 4I Coefficients of Transmission (U) of Wood Construction Flat Roofs and Ceilings[a] (Winter Conditions, Upward Flow)

Coefficients are expressed in Btu per (hour) (square foot) (degree Fahrenheit difference in temperature between the air on the two sides), and are based upon an outside wind velocity of 15 mph

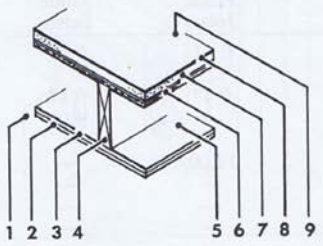

Replace Roof Deck Insulation and Partially Fill the 7.25-in. Air Space with 6-in. R-19 Blanket Insulation and 1.25-in. Air Space (New Items 5 and 7)

Construction (Heat Flow Up)	1 Resistance (R) Between Joists	1 Resistance (R) At Joists	2 Between Joists	2 At Joists
1. Inside surface (still air)	0.61	0.61	0.61	0.61
2. Acoustical tile, fiberboard, 0.5 in.	1.25	1.25	1.25	1.25
3. Gypsum wallboard, 0.5 in.	0.45	0.45	0.45	0.45
4. Nominal 2-in. × 8-in. ceiling joists	—	9.06	—	9.06
5. Nonreflective air space, 7.25 in. (50 F mean; 10 deg F temperature difference)	0.93*	—	1.05**	—
6. Plywood deck, 0.625 in.	0.78	0.78	0.78	0.78
7. Rigid roof deck insulation, c = 0.72, (R = 1/C)	1.39	1.39	19.00	—
8. Built-up roof	0.33	0.33	0.33	0.33
9. Outside surface (15 mph wind)	0.17	0.17	0.17	0.17
Total Thermal Resistance (R)	R_i=5.91	R_s=14.04	R_i=23.64	R_s=12.65

Construction No. 1: U_i = 1/5.91 = 0.169; U_s = 1/14.04 = 0.071. With 10% framing (typical of 2-in. joists @ 16-in. o.c.), U_{av} = 0.9 (0.169) + 0.1 (0.071) = 0.159

Construction No. 2: U_i = 1/23.64 = 0.042; U_s = 1/12.65 = 0.079. With framing unchanged, U_{av} = 0.9 (0.042) + 0.1 (0.079) = 0.046

Ref.
ASHRAE Fundamentals

PLANNING & DEVELOPMENT
PRESERVE
SHAPE
BUILD

IECC C403 – Building Mechanical Systems

- Mechanical equipment and systems serving building heating, cooling, and ventilating needs shall meet all mandatory provisions in Section C403.3.2
- Energy use is regulated when equipment is used primarily for human comfort or heating and cooling of a building to protect its contents
- Mechanical and service water heating system and equipment efficiencies, types, sizes, and controls (SEER, EER, COP, IPLV, HSPF, AFUE, EF)

PLANNING & DEVELOPMENT
PRESERVE
SHAPE
BUILD

HVAC Efficiency

- The **SEER rating**, **or Seasonal Energy Efficiency Ratio**, of a unit is the cooling output during a typical cooling-season divided by the total electric energy input during the same period. The higher the unit's **SEER rating** the more energy efficient it is.

PLANNING & DEVELOPMENT
PRESERVE
SHAPE
BUILD

IECC C403 – HVAC Mandatory Provisions

- System design, C403.2.
- Equipment sizing based on calculated cooling loads, C403.1.1
- HVAC efficiency requirements found in Tables C403.3.2(1) thru C403.3.2(9)
- Heating and cooling systems controls, C403.4
- Economizers (Prescriptive) ,C403.5
- Enclosed parking garage ventilation, C403.7.2
- Kitchen exhaust systems, C403.7.5 - Where total kitchen hood exhaust airflow rate is greater than 5,000 cfm (2360 L/s), each hood shall be a factory-built commercial exhaust hood listed by a nationally recognized testing laboratory in compliance with UL 710. Each hood shall have a maximum exhaust rate as specified in Table C403.7.5
- Walk-in coolers, walk-in freezers, refrigerated warehouse coolers and refrigerated warehouse freezers, C403.10.1
- Duct and plenum insulation and sealing, C403.11.1
- Piping insulation, C403.11.3
- Mechanical systems located outside of building thermal envelope, C403.12

PLANNING & DEVELOPMENT
PRESERVE
SHAPE
BUILD

IECC C404 – Service Water Heating (Mandatory)

- Minimum performance of water heating equipment and hot water storage tanks, Table C404.2
- Heat traps for hot water storage tanks, C404.3
- Insulation of piping, C404.4
- Heated water supply piping shall be in accordance with C404.5.1, C404.5.2
- Heated-water circulating, temperature maintenance
  - Circulation systems, C404.6.1
  - Electric heat trace systems, C404.6.2

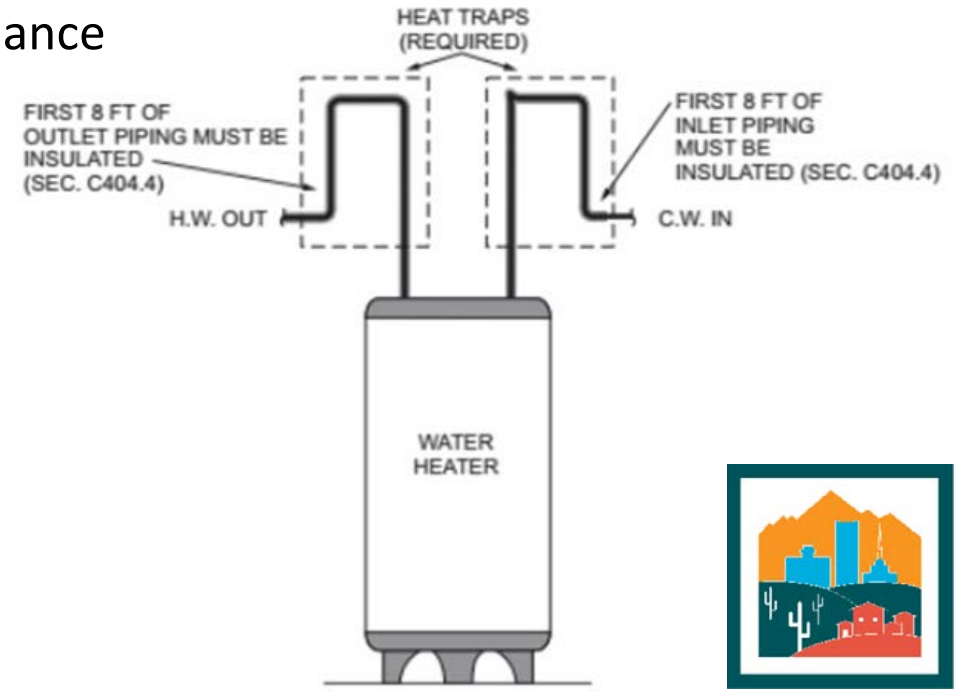

PLANNING & DEVELOPMENT
PRESERVE
SHAPE
BUILD

IECC C404 – Additional Efficiency Package Options

Commercial buildings following the prescriptive path shall meet one of the following:

1. Efficient HVAC Performance, C406.2
2. Reduced lighting power, C406.3
3. Enhanced digital lighting controls, C406.4
4. On-site renewable energy, C406.5
5. Dedicated outdoor air systems, C406.6
6. Reduced energy use in service water heating, C406.7
7. Enhanced envelope performance, C406.8
8. Reduced air infiltration, C406.9

PLANNING & DEVELOPMENT
PRESERVE
SHAPE
BUILD

IECC C407 – Total Building Performance

- Allows for tradeoffs in performance among building systems while still meeting mandatory requirements
- Annual energy costs of heating, cooling, and service water heating in a proposed building shall be equal to or less than 85% of a standard building design
- Use local climatic data, annual hours and local energy costs in analysis
- Must submit a computer-generated compliance report prepared and signed by a Registered design professional

PLANNING & DEVELOPMENT
PRESERVE
SHAPE
BUILD

Common Mistakes

- For New Builds. Buildings shall be designed and constructed in accordance with the 2018 International Energy Conservation Code. Please provide sufficient information on the drawings to demonstrate compliance with the prescriptive requirements of the 2018 IECC.
- Additional Efficiency Package Options are required for all new builds. Coordinate with electrical design which option is to be used IECC C406.2 or IECC C406.3. Provide written response which method will be chosen and will be in compliance, IEEC C406.1.
- Single compliance method not followed
- COM*check*™ or energy report does not match plans
- Roof and wall details incomplete
- No compliance information for windows and doors
- Cooling load calculations & equipment sizing. Submittal of a COMcheck report with generic requirements does not substitute for the actual calculations
- Additional efficiency option not specified
- Ductwork and piping insulation not specified
- HVAC economizers not specified
- SEER rating for equipment not specified

PLANNING & DEVELOPMENT
PRESERVE
SHAPE
BUILD

Questions?

John Brean, P.E.
Mechanical Plans Engineer
602-534-6498
john.brean@phoenix.gov

PLANNING & DEVELOPMENT
PRESERVE
SHAPE
BUILD