2015

CITY OF PHOENIX SUPPLEMENTAL STANDARD DETAILS FOR PUBLIC WORKS CONSTRUCTION

2015 CITY OF PHOENIX SUPPLEMENTAL STANDARD DETAILS TO THE 2015 MAG UNIFORM STANDARD, SPECIFICATIONS AND DETAILS FOR PUBLIC WORKS CONSTRUCTION

The **2015 edition** of the City of Phoenix Supplemental Standard Details to the 2015 Maricopa Association of Governments Uniform Standard Specifications and Details for Public Works Construction is effective **July 1, 2015**. The **2015 edition** supersede all previous editions.

All public works construction contracts advertised and all permits issued on or after **July 1, 2015** shall be governed by the **2015 edition**.

A copy of the **2015 edition** is available for review and download on the City of Phoenix Website at the following address:

https://www.phoenix.gov/streets/reference-material/2015maguniformstd

For more information, or a copy of this publication in an alternate format, contact Street Transportation Department at 602-262-6284 (Voice) and 602-256-4286 (TTY).

New Supplemental Standard Details:

Detail Number	Title
P1240-2	CURB RAMP DETAIL WITH DETACHED S/W (CORNER AT A DIAGONAL)
P1240-3	CURB RAMP DETAIL WITH ATTACHED S/W (CORNER AT A DIAGONAL)
P1243-1	WITHOUT DECELERATION LANE
P1243-2	WITHOUT DECELERATION LANE
P1243-3	WITH DECELERATION LANE
P1243-4	WITH DECELERATION LANE

Updated Supplemental Standard Details:

Detail Number	Title
P1020-1	PLANNED AREA DEVELOPMENT
P1200	TRENCH BACKFILL & SURFACE REPLACEMENT
P1230	SIDEWALKS
P1231	APRON JOINTS
P1232	TRUNCATED DOMES DETAIL
P1233	CURB RAMP DETAIL – 25’, 30’, & 35’ RADII 8’ LANDSCAPE PLANTERS, BOTH LEGS
P1234	CURB RAMP DETAIL – 25’, 30’, & 35’ RADII 8’ & 5’ LANDSCAPE PLANTERS
P1235	CURB RAMP DETAIL – 25’, 30’, & 35’ RADII 8’ LANDSCAPE PLANTERS, ONE SIDE
P1236	CURB RAMP DETAIL – 25’, 30’, & 35’ RADII NO LANDSCAPE PLANTERS
P1238-1	CURB RAMP DETAIL – 20’ RADIUS LANDSCAPE PLANTERS, BOTH / ONE LEG(S)
P1238-2	CURB RAMP DETAIL – 20’ RADIUS NO LANDSCAPE PLANTERS
P1239	CURB RAMP DETAIL – 20’ RADIUS 4” VERTICAL CURB RETURN
P1240	SINGLE CURB RAMP DETAIL ALL RADIUS CURB RETURNS

Deleted Supplemental Standard Details:

Detail Number	Title
P1422	CONCRETE COLLAR AROUND MANHOLE FRAME

This Page Reserved for Future Use

1000 SERIES
TRAFFIC ENGINEERING

NO	TITLE	DATE
P1010	MINIMUM ARTERIAL STREET CROSS SECTIONS	2008
P1013	MINIMUM COLLECTOR STREET CROSS SECTIONS	2008
P1014	MINIMUM LOCAL STREET CROSS SECTIONS	2008
P1017	ACCESS ROAD OPENING	1992
P1018	ACCESS ROAD TERMINATION AT ALLEYS	2000
P1019	ACCESS ROAD TERMINATION AT INTERSECTION	2008
P1020-1	PLANNED AREA DEVELOPMENT	REV. 2015
P1020-2	PRIVATE ACCESSWAY	2008
P1021	PRIVATE DRIVEWAY (STREET) (FOR PLANNED AREAS, SUB-LOTS, SPECIAL PERMITS, ETC.)	1992
P1024	STEEL PIPE BARRICADE	1992

1100 SERIES
GENERAL INFORMATION

NO	TITLE	DATE
P1102	DEPTH OF BASE COURSE RESIDENTIAL STREET	1992
P1103	DEPTH OF BASE COURSE (LOCAL COMMERCIAL & LIGHT INDUSTRIAL STREETS)	1992
P1104	DEPTH OF BASE COURSE (MAJOR STREETS & HEAVY INDUSTRIAL STREETS)	2002
P1105	STEEL COVER FOR OPEN TRENCHES	1992
P1106	BARRICADE	1992
P1120	V.C.P. TRENCH LOADING	2012
P1121	8" & 10" V.C.P. TRENCH LOADING	1992
P1122	12" & 15" V.C.P. TRENCH LOADING	1992
P1123	18" & 21" V.C.P. TRENCH LOADING	1992
P1124	24" & 27" V.C.P. TRENCH LOADING	1992
P1125	30" & 33" V.C.P. TRENCH LOADING	1992
P1126	36" & 39" V.C.P. TRENCH LOADING	1992
P1127	42" V.C.P. TRENCH LOADING	1992
P1130	MULTI-USE TRAILS AND SHARED-USE PATHS	2008
P1131	VERTICAL CLEARANCE, MULTI-USE, SHARED-USE, AND UNDERPASS/BRIDGE CLEARANCE	2008
P1164	MAXIMUM DRIVEWAYS & ALLEYS SLOPE	1994
P1165	DEBRIS CAP INSTALLATION	2008
P1170	TRENCHING STEEL PLATE	1992
P1173	SAFETY RAILING DETAIL	2012
P1174	CONDITIONS WHERE SAFETY RAILS ARE REQUIRED	2012

1200 SERIES
STREET INFORMATION

NO	TITLE	DATE
P1200	TRENCH BACKFILL & SURFACE REPLACEMENT	REV. 2015
P1230	SIDEWALKS	REV. 2015
P1231	APRON JOINTS	REV. 2015
P1232	TRUNCATED DOMES DETAIL	REV. 2015
P1233	CURB RAMP DETAIL - 25', 30', & 35' RADII 8' LANDSCAPE PLANTERS, BOTH SIDES	REV. 2015
P1234	CURB RAMP DETAIL - 25', 30', & 35' RADII 8' & 5' LANDSCAPE PLANTERS	REV. 2015
P1235	CURB RAMP DETAIL - 25', 30', & 35' RADII 8' LANDSCAPE PLANTER, ONE SIDE	REV. 2015
P1236	CURB RAMP DETAIL - 25', 30', & 35' RADII NO LANDSCAPE PLANTERS	REV. 2015
P1237	CURB RAMP DETAIL - ALL RADIUS CURB RETURNS, LIMITED RIGHT OF WAY	2008

1200 SERIES
STREET INFORMATION (CONTINUED)

NO	TITLE	DATE
P1238-1	CURB RAMP DETAIL - 20' RADIUS LANDSCAPE PLANTERS, BOTH/ONE LEG(S)	REV. 2015
P1238-2	CURB RAMP DETAIL - 20' RADIUS NO LANDSCAPE PLANTERS	REV. 2015
P1239	CURB RAMP DETAIL - 20' RADIUS 4" VERTICAL CURB RETURN	REV. 2015
P1240	SINGLE CURB RAMP DETAIL ALL RADIUS CURB RETURNS	REV. 2015
P1240-1	SINGLE CURB RAMP DETAIL WITH LIMITED R/W	2012
P1240-2	CURB RAMP DETAIL WITH ATTACHED S/W (CORNER AT A DIAGONAL)	NEW 2015
P1240-3	CURB RAMP DETAIL WITH DETACHED S/W (CORNER AT A DIAGONAL)	NEW 2015
P1241-1	CURB RAMP DETAIL (MID BLOCK)	2012
P1241-2	CURB RAMP DETAIL (MID BLOCK) WITH DETACHED SIDEWALK	2012
P1241-3	CURB RAMP DETAIL (MID BLOCK) WITH 4" ROLL CURB	2012
P1241-4	CURB RAMP DETAIL (MID BLOCK) MODIFIED (LIMITED RIGHT OF WAY)	2012
P1243	RETURN TYPE DRIVEWAYS WITH ATTACHED SIDEWALK	2004
P1243-1	LIMITED ACCESS DRIVEWAY WITH NO LT-IN AND WITHOUT DECELERATION LANE	NEW 2015
P1243-2	LIMITED ACCESS DRIVEWAY WITH NO LT-IN/OUT AND WITHOUT DECELERATION LANE	NEW 2015
P1243-3	LIMITED ACCESS DRIVEWAY WITH NO LT-IN AND WITH DECELERATION LANE	NEW 2015
P1243-4	LIMITED ACCESS DRIVEWAY WITH NO LT-IN/OUT AND WITH DECELERATION LANE	NEW 2015
P1244	DRIVEWAY - PEDESTRIAN RAMP COMBINATION (FOR USE AT T TYPE INTERSECTIONS)	2008
P1255-1	DRIVEWAY ENTRANCE - TYPE I (SIDEWALK ADJACENT TO CURB)	2008
P1255-2	DRIVEWAY ENTRANCE - TYPE II (DETACHED SIDEWALK)	2008
P1255-3	DRIVEWAY ENTRANCE - ADA RETROFIT	2003
P1255-4	DRIVEWAY WIDTHS POLICY	2008
P1256-1	BUS BAY (TYPE 1)	2008
P1256-2	BUS BAY (TYPE 2)	2008
P1258	BUS SHELTER PAD LOCATION (BUS STOP)	2008
P1260	BUS SHELTER/ACCESSORY PAD BUS STOP	2008
P1261	BUS SHELTER/ACCESSORY PAD BUS BAY	2008
P1262	PARKWAY BUS SHELTER/ACCESSORY PAD	2008
P1263-1	BUS SHELTER/ACCESSORY PAD FRONTAGE ROAD MID-BLOCK	2008
P1263-2	PARKWAY BUS SHELTER/ACCESSORY PAD	2008
P1270	FRAME AND COVER INSTALLATION AND GRADE ADJUSTMENT	2008
P1270-1	SECURE VALVE BOX LID TYPE A	2001

1300 SERIES
WATER INFORMATION

NO	TITLE	DATE
P1315	STEEL WATER METER BOX COVER	1992
P1342	WATER SERVICE CONNECTIONS	2008
P1343	WATERLINE – CUT AND PLUG FOR 12" DIA. MAIN AND SMALLER	1994
P1344	WATERLINE CUT OUT (TEES & CROSSES) FOR 12" DIA. MAIN AND SMALLER	1992
P1351	REDUCED PRESSURE PRINCIPLE BACKFLOW PREVENTION ASSEMBLY INSTALLATION – 3" AND OVER	2001
P1352	DOUBLE CHECK VALVE BACKFLOW PREVENTION ASSEMBLY INSTALLATION – 3" AND OVER	2001
P1353	DOUBLE CHECK VALVE BACKFLOW PREVENTION ASSEMBLY INSTALLATION – 2 1/2" AND UNDER	2001
P1354	REDUCED PRINCIPLE BACKFLOW PREVENTION ASSEMBLY INSTALLATION – 2 1/2" AND UNDER	2001
P1355	PRESSURE VACUUM BREAKER ASSEMBLY INSTALLATION 2" AND UNDER	2001
P1356	TEMPORARY SUPPORT FOR FIRE HYDRANT BACKFLOW ASSEMBLY	2001
P1359	HYDRANT GUARDS	2001
P1360	FIRE HYDRANT ASSEMBLY	2008
P1361	FIRE HYDRANT THREADS 2 1/2" & 4"	1992
P1362	FIRE HYDRANT LOCATION	2004
P1363	WATER METER LOCATION	2000
P1370	VERTICAL REALIGNMENT OF WATERLINE	2012
P1391	VALVE BOX INSTALLATION	2008
P1391–1	VALVE OPERATING NUT EXTENSION	2001
P1394	PRESSURE REDUCING & SUSTAINING VALVE	1992
P1395	WATER LINE SUSPENSION	1992
P1396	DOUBLE CHECK VALVE ASSEMBLY	1992

1400 SERIES
SANITARY SEWER INFORMATION

NO	TITLE		DATE
P1422	CONCRETE COLLAR AROUND MANHOLE FRAME	DELETED	2015
P1424	24" & 30" MANHOLE COVERS		2012
P1424–1	STORM DRAIN MANHOLE COVER	REV.	2105
P1431	SEWER TAP DEPTH & MARKING		1999
P1432	SEWER TAP RETROFITTING		1999
P1435	SANITARY SEWER MANHOLE KNOCKOUT		2004
P1440	SEWER BUILDING CONNECTION & ELECTRONIC MARKERS		2012

1500 SERIES
IRRIGATION & STORM INFORMATION

NO	TITLE		DATE
P1505	CONCRETE PIPE COLLAR		2012
P1520	STORM DRAIN MANHOLE BASE 48" & SMALLER		1992
P1560	STORM DRAIN MANHOLE BASE TRANSITION 51" & LARGER	REV.	2015
P1561	FRAME AND COVER CATCH BASIN ACCESS		2008
P1562	BARRIER SPECIFICATION SCHEDULE		2003
P1563	STORM DRAIN OUTFALL ACCESS BARRIER	REV.	2015
P1564	CATCH BASIN GRATE FRAMES		1992
P1565	CATCH BASIN GRATES	REV.	2015
P1566	CATCH BASIN COMBINATION TYPE "J" WITH CONCRETE APRON		2012
P1567	CATCH BASIN COMBINATION TYPE "K"		2012
P1568	CATCH BASIN – TYPE "L" CURB & PARKWAY OPENING INLET DETAILS		2012
P1569–1	CATCH BASIN TYPE "M"		2012
P1569–2	CATCH BASIN – TYPE "M" TOP MODIFICATION IN LANDSCAPE PARKWAY		2012
P1570	CATCH BASIN TYPE "N"		2012
P1571	CATCH BASIN – TYPE "P" DOUBLE CURB OPENING FOR FRONTAGE ROAD ISLANDS		2012
P1572	CATCH BASIN TYPE "Q"		2012
P1573	CATCH BASIN TYPE "R"		2012
P1574	INLET CURB OPENING & PIPE ENTRY DETAIL		1992
P1575	CONSTRUCTION SUB–GRADE DRAIN		1992
P1576	CAST–IN–PLACE PIPE LATERAL PIPE CONNECTION		1999
P1577	SMALL STORM DRAIN LATERAL OR CATCH BASIN CONNECTOR PIPE CONNECTION TO EXISTING STORM DRAIN MAIN	REV.	2015
P1578	LARGE STORM DRAIN LATERAL OR CATCH BASIN CONNECTOR PIPE TO EXISTING RCP STORM DRAIN MAIN	REV.	2015
P1581	CATCH BASIN – TYPE "M" MODIFIED (OFFSET OPENING)		2000
P1583	CATCH BASIN – TYPE "L–R" MODIFIED (WITH REAR INLET)		2012
P1584	CATCH BASIN – TYPE "R" MODIFIED (WITH WING AND OFFSET OPENING)		2012

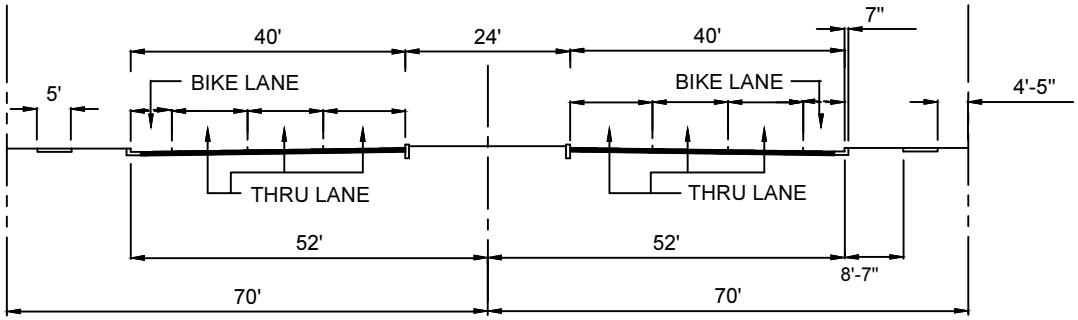

CROSS SECTION A

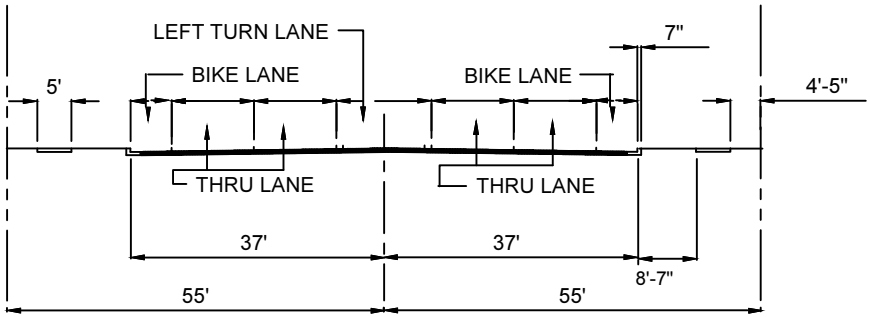

CROSS SECTION C

CROSS SECTION C-M. (SEE NOTE 4)

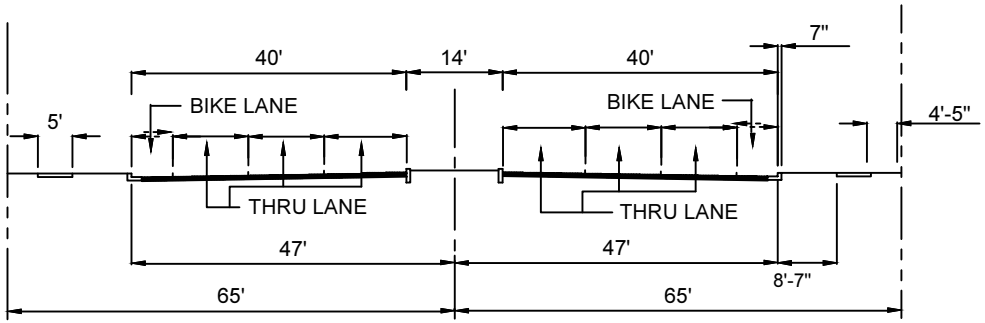

CROSS SECTION B

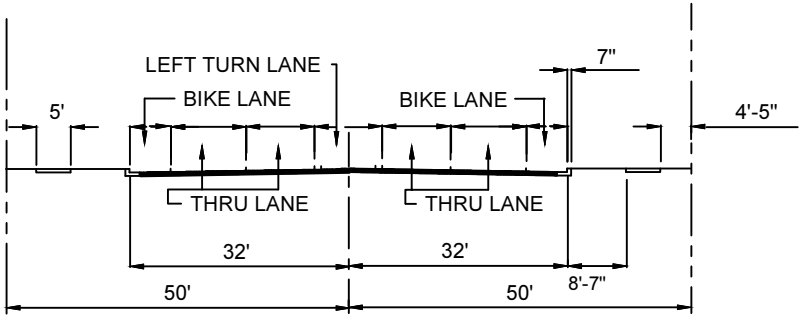

CROSS SECTION D

NOTES:

1. LANE WIDTHS AND CONFIGURATION ARE CONCEPTUAL ONLY. FINAL LANE WIDTHS AND CONFIGURATION TO BE APPROVED BY THE STREET TRANSPORTATION DEPT.
2. ADDITIONAL RIGHT-OF-WAY MAY BE REQUIRED FOR DRAINAGE, UTILITIES, SLOPE RIGHTS, TRAFFIC SIGNALS, IRRIGATION FACILITIES OR TRAILS.**
3. CROSS SECTION "C" HAS A 14' TWO WAY LEFT TURN LANE.
   CROSS SECTION "C-M" HAS A 14' RAISED MEDIAN.
4. ALL DIMENSIONS ARE TO THE FACE OF CURB.

** ACCORDING TO THE TRAILS PLAN, A 10 FOOT SIDEWALK MAY BE REQUIRED ON CROSS SECTIONS A, B, C, D, E, F, & G.

DETAIL NO.	City of Phoenix STANDARD DETAIL	MINIMUM ARTERIAL STREET CROSS SECTIONS	APPROVED ACTING CITY ENGINEER 7/31/08 DATE	DETAIL NO.
P1010				P1010

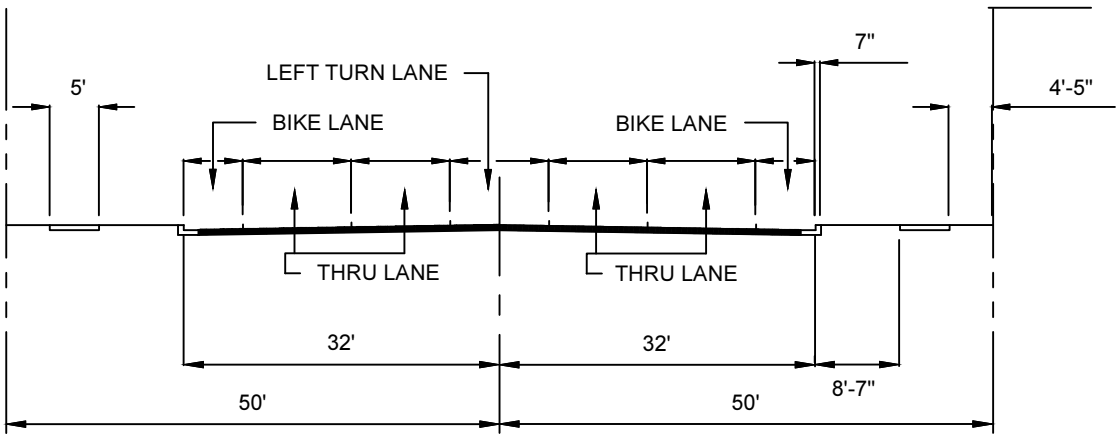

CROSS SECTION D

NOTES:

1. LANE WIDTHS AND CONFIGURATION ARE CONCEPTUAL ONLY. FINAL LANE WIDTHS AND CONFIGURATION TO BE APPROVED BY THE STREET TRANSPORTATION DEPT.
2. ADDITIONAL RIGHT-OF-WAY MAY BE REQUIRED FOR DRAINAGE, UTILITIES, SLOPE RIGHTS, TRAFFIC SIGNALS, IRRIGATION FACILITIES OR TRAILS.
3. ALL DIMENSIONS ARE TO THE FACE OF CURB.

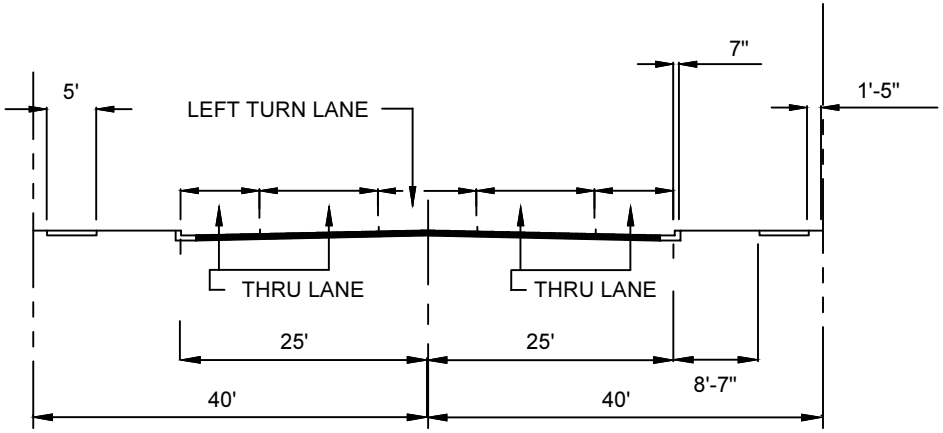

CROSS SECTION E

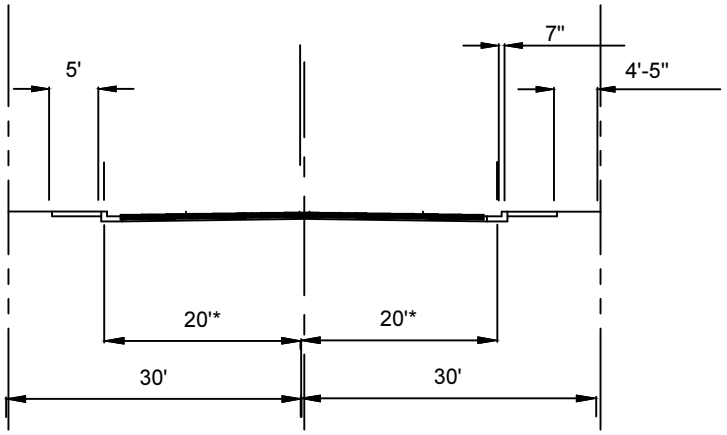

CROSS SECTION F

* COLLECTORS WITH RESIDENTIAL BACKUP TREATMENT MAY BE 18'.

DETAIL NO.	City of Phoenix STANDARD DETAIL	MINIMUM COLLECTOR STREET CROSS SECTIONS	APPROVED ACTING CITY ENGINEER 7/31/08 DATE	DETAIL NO.
P1013				P1013

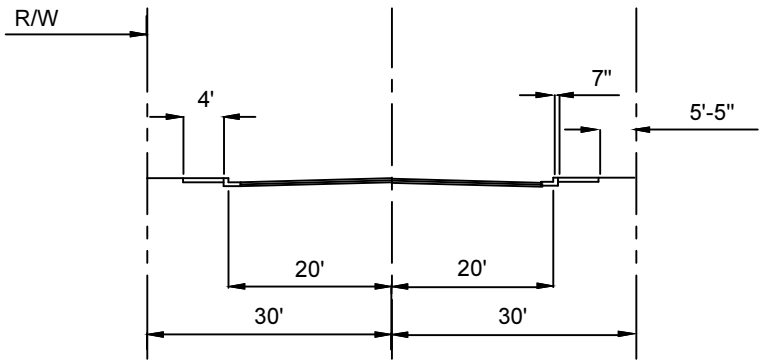

CROSS SECTION F

INDUSTRIAL LAND USE
VERTICAL CURB AND ADJACENT SIDEWALK

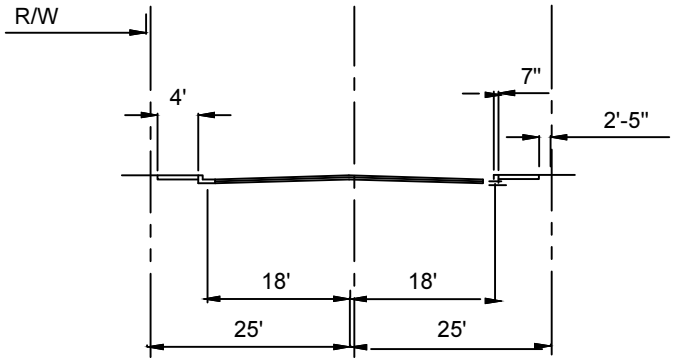

CROSS SECTION G

COMMERCIAL & MULTI FAMILY
RESIDENTIAL LAND USE
VERTICAL CURB AND ADJACENT SIDEWALK

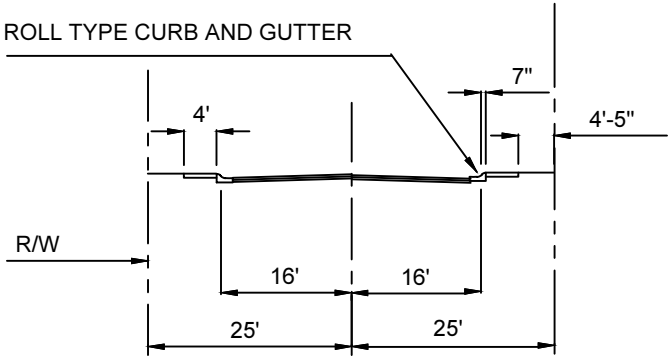

CROSS SECTION H

SINGLE FAMILY RESIDENTIAL LAND USE

OPTION A:
ROLL CURB AND ADJACENT SIDEWALK

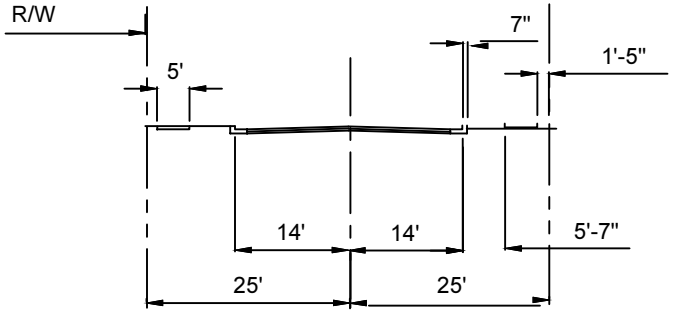

CROSS SECTION I

SINGLE FAMILY RESIDENTIAL LAND USE

OPTION B:
VERTICAL CURB AND SET BACK SIDEWALK

NOTES:

LANE WIDTHS AND CONFIGURATION ARE CONCEPTUAL ONLY. FINAL LANE WIDTHS AND CONFIGURATION TO BE APPROVED BY THE STREET TRANSPORTATION DEPT.

ADDITIONAL RIGHT-OF-WAY MAY BE REQUIRED FOR DRAINAGE, UTILITIES, SLOPE RIGHTS, IRRIGATION FACILITIES, OR TRAILS.

ALL DIMENSIONS ARE TO THE FACE OF CURB.

ALL CURBS ARE VERTICAL UNLESS NOTED.

DETAIL NO.	City of Phoenix STANDARD DETAIL	MINIMUM LOCAL STREET CROSS SECTIONS	APPROVED ACTING CITY ENGINEER 7/31/08 DATE	DETAIL NO.
P1014				P1014

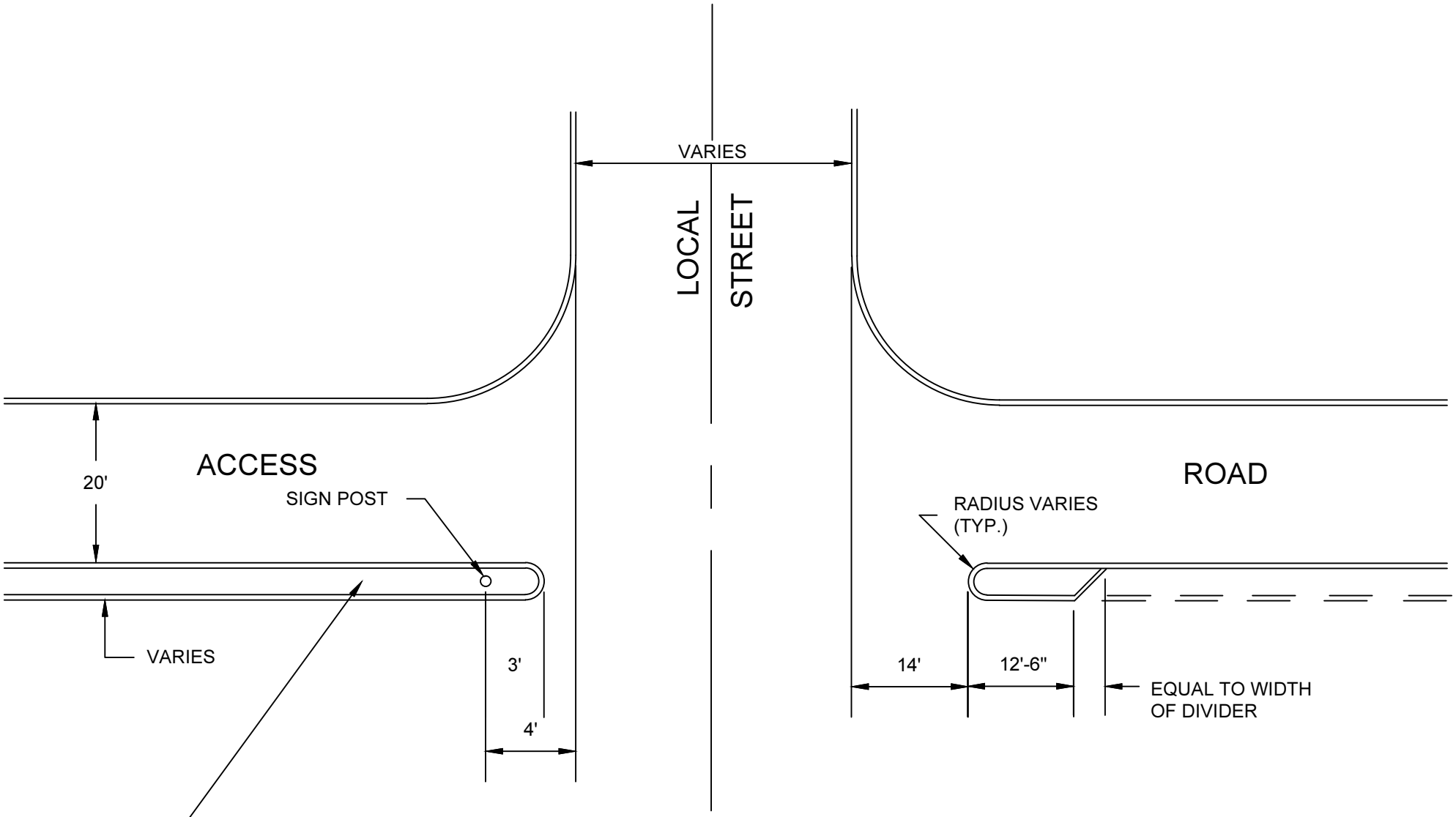

NOTE:

DIMENSIONS SHOWN ARE TO THE FACE OF CURB

DETAIL NO.	City of Phoenix STANDARD DETAIL	ACCESS ROAD OPENING	APPROVED FOR CITY ENGINEER — DATE 7/9/92	DETAIL NO.
P1017				P1017

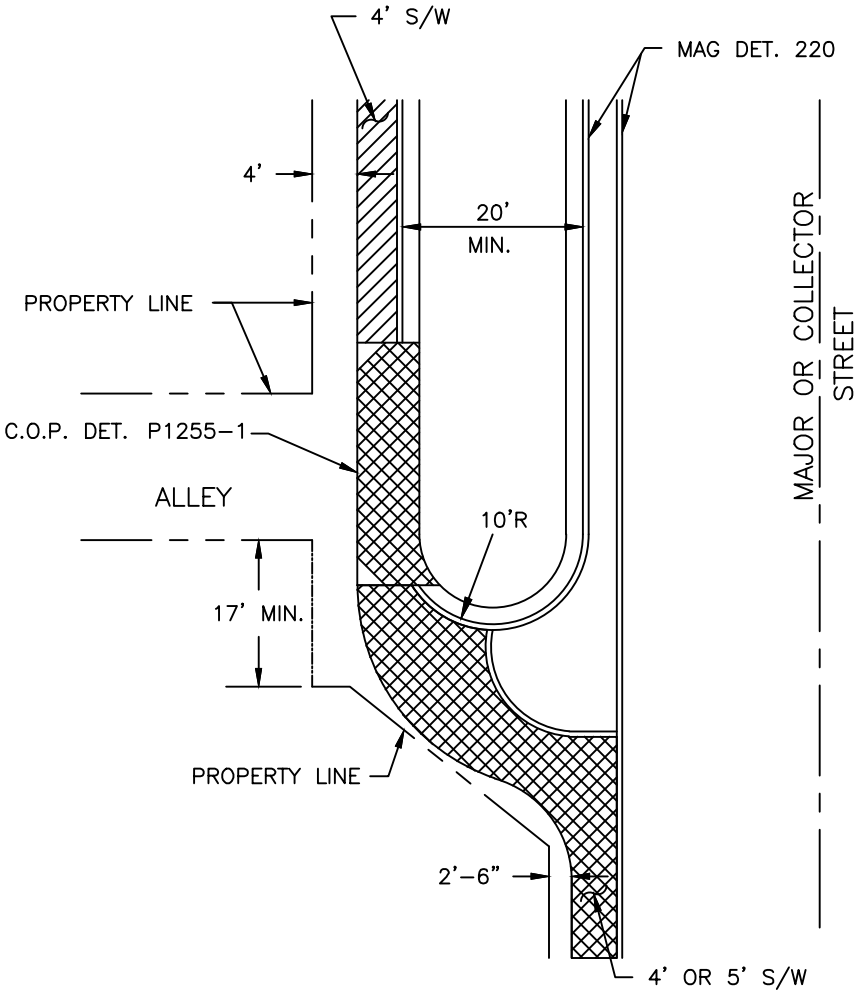

NOTE:

SUFFICIENT RIGHT-OF-WAY MUST BE AVAILABLE TO CONSTRUCT ACCESS ROAD TERMINATION

SINGLE FAMILY ALLEY

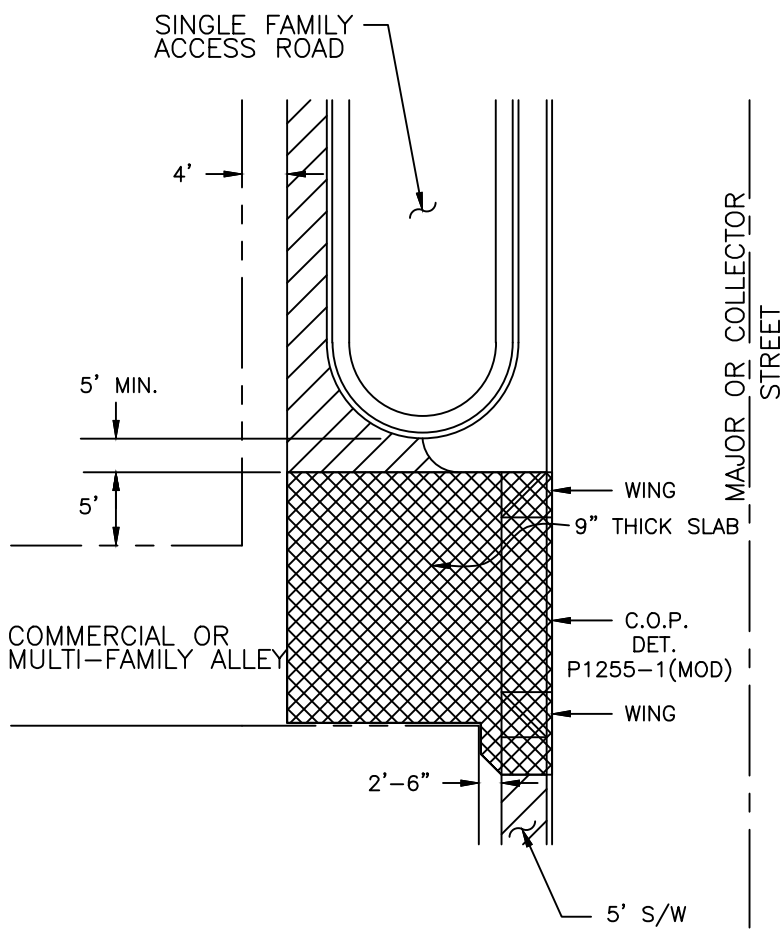

NOTE:

1. COMMERCIAL AND MULTI-FAMILY ALLEYS MAY NOT PROVIDE ACCESS TO SINGLE FAMILY ACCESS ROADS.
2. ONLY ALLOWED FOR LOCATIONS WHERE REFUSE COLLECTION IS NOT PROVIDED ALONG THE ACCESS ROAD.

COMMERCIAL OR MULTI-FAMILY ALLEY

DETAIL NO.	City of Phoenix STANDARD DETAIL	ACCESS ROAD TERMINATION AT ALLEYS	APPROVED CITY ENGINEER 7/3/00 DATE	DETAIL NO.
P1018				P1018

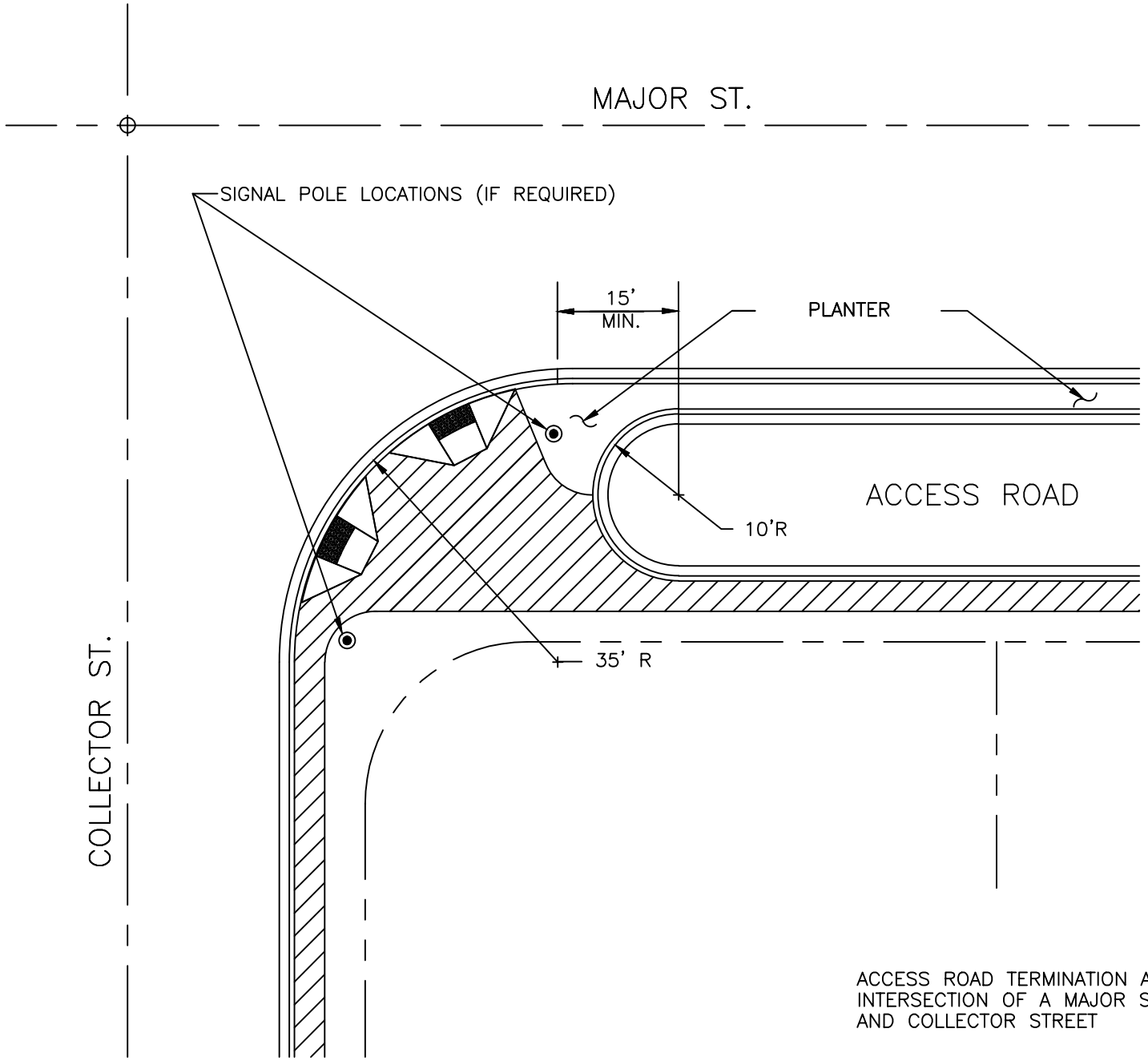

ACCESS ROAD TERMINATION AT THE INTERSECTION OF A MAJOR STREET AND COLLECTOR STREET

REVISED 4/14/08

DETAIL NO.	City of Phoenix STANDARD DETAIL	ACCESS ROAD TERMINATION AT INTERSECTION	APPROVED ACTING CITY ENGINEER 7/31/08 DATE	DETAIL NO.
P1019				P1019

A PRIVATE ACCESSWAY IS INTENDED TO APPLY TO PRIVATE STREETS WITHIN DEVELOPMENTS SUCH AS PRD'S PAD'S, MOBILE–HOME PARKS, AND HILL SIDE DEVELOPMENTS WHERE LOT SALES ARE PROPOSED.

1. PRIVATE ACCESS WAYS WILL BE ALLOWED IN NEW DEVELOPMENTS WHERE THEIR USE IS LOGICALLY CONSISTENT WITH A DESIRE FOR NEIGHBORHOOD IDENTIFICATION AND CONTROL OF ACCESS, AND WHERE SPECIAL OVERALL DESIGN CONCEPTS MAY BE INVOLVED.
2. PRIVATE ACCESS WAYS WILL BE PERMITTED ONLY WHERE A SATISFACTORY MEANS OF PROVIDING FOR THEIR MAINTENANCE AND OPERATION IS DEMONSTRATED.
3. THE USE OF PRIVATE ACCESS WAYS AS A DEVICE FOR PERMITTING INADEQUATE DESIGN WILL NOT BE ALLOWED.
4. THE USE OF PRIVATE ACCESS WAYS IS ORDINARILY LIMITED TO CUL–DE–SACS AND TO LOCAL STREETS NOT CARRYING THROUGH TRAFFIC. NORMALLY COLLECTOR STREETS WILL BE PUBLIC. FURTHER, THERE WILL BE AN ADEQUATE INTERNAL CIRCULATION SYSTEM AND NO PROPERTY WILL BE LANDLOCKED BY A PRIVATE ROAD SYSTEM.
5. THE DESIGN OF ALL PRIVATE ACCESS WAYS SHALL BE REVIEWED AND APPROVED BY D.S.D. THE CONSTRUCTION SHALL BE INSPECTED BY D.S.D., WITH A STANDARD INSPECTION FEE TO BE PAID.
6. NOTE TO BE PLACED ON PLAT "PRIVATE ACCESS WAY, NOT DEDICATED FOR PUBLIC USE".
7. THE HOMEOWNER'S ASSOCIATION CONSTITUTION AND BY–LAWS SHALL INCLUDE ACKNOWLEDGEMENT OF THE OWNERSHIP AND MAINTENANCE RESPONSIBILITY OF THESE PRIVATE FACILITIES, INCLUDING RESPONSIBILITY FOR ENFORCEMENT OF TRAFFIC CONTROL.
8. GATED ENTRIES ARE ALLOWED IF TURNAROUND AREAS ARE PROVIDED PER DSD GATED ENTRY DETAILS

I GENERAL

1. PRIVATE ACCESS WAYS, AND/OR REFUSE COLLECTION EASEMENTS MAY BE USED IN PAD'S, MOBILE–HOME DEVELOPMENTS AND PRD'S AND SHALL BE KNOWN AS "PRIVATE ACCESS WAYS". UTILITIES MAY BE PLACED IN A PRIVATE ACCESS WAY IF THEY ARE AT LEAST 28' WIDE.
2. MAJOR DRAINAGE WAYS SHALL BE DEDICATED.
3. SIDEWALKS ARE NORMALLY REQUIRED ADJACENT TO ALL COLLECTOR STREETS AND IN ALL MULTIFAMILY DEVELOPMENTS AND DEVELOPMENTS WITH LOTS LESS THAN 18,000 SQ. FT. OR IN THE SAID EASEMENT RIGHT OF WAY UNLESS OTHER MEANS OF ACCOMMODATING PEDESTRIAN TRAFFIC ARE PROVIDED IN THE DEVELOPMENT.
4. PRIVATE ACCESS WAYS SHALL BE ADEQUATELY DESIGNED TO CITY SPECIFICATIONS TO PROVIDE FOR LANE DELINEATION, STREET SWEEPING, AND DRAINAGE CONTROL. NORMALLY, A CROWN SECTION WITH CONCRETE CURB OR CONCRETE CURB AND GUTTER ON BOTH SIDES WILL BE REQUIRED; HOWEVER, OTHER MEANS OF PROVIDING SIMILAR FUNCTIONAL CHARACTERISTICS MAY BE CONSIDERED IF APPROVED BY THE PLAN REVIEW TEAM.
5. RETURN–TYPE DRIVEWAY ENTRANCE MAY BE USED ON PRIVATE ACCESS WAYS. IF THE STREET IS 28' OR GREATER. DEPRESSED DRIVEWAY APPROACHES SHALL BE USED WHERE THERE IS ONLY DIRECT ACCESS TO A PARKING AREA OR WHERE THE STREET IS LESS THAN 28' WIDE.

II MINIMUM PAVEMENT WIDTHS

THE ENTIRE WIDTH OF THE PRIVATE ACCESS WAY SHALL BE DESIGNATED BY PLAT AS A "PRIVATE ACCESS WAY".

STREET CLASSIFICATION	CURB TO CURB	CURB RETURNS
COLLECTOR	36'–40'	35'
LOCAL STREETS		
WITH PARKING PLANNED ON BOTH SIDES	29'–36'	20'
WITHOUT PLANNED PARKING	24'	25'
ONE–WAY, PLANNED PARKING ONE SIDE	22'–24'	25'

III GRADES

1. DESIRABLE MAXIMUM – 10%
2. MAXIMUM – 15%
3. MINIMUM – 0.30% – GRADES LESS THAN 0.30% SHALL REQUIRE CONCRETE VALLEY GUTTERS, ABSOLUTE MINIMUM GRADE 0.15%.

IV ALIGNMENT

1. STREET SHALL NORMALLY INTERSECT AT RIGHT ANGLES AND NO GREATER DEFLECTION THAN 15° FROM A RIGHT ANGLE WILL BE ALLOWED AND SHALL HAVE AT LEAST 20° TANGENT ADJACENT TO INTERSECTIONS. THE TANGENT LENGTH SHALL BE INCREASED WHERE SHORT RADIUS CURVES ARE USED NEAR THE INTERSECTIONS.
2. CUL–DE–SACS SHALL NOT ORDINARILY EXCEED 400' IN LENGTH. CURB RADIUS TO FACE OF CURB AT THE TURNAROUND SHALL BE 45' RADIUS MINIMUM.
3. IN SPECIAL SITUATIONS WHERE CITY REFUSE COLLECTION AND/OR CITY MAINTENANCE IS NOT REQUIRED, DEAD–ENDED PRIVATE ACCESS WAYS MAY BE USED AND SHOULD NOT EXCEED 300 LINEAL FEET. ADEQUATE TURNAROUND FACILITIES MAY BE REQUIRED AT THE END OF EACH DEAD–ENDED PRIVATE ACCESS WAY FOR EMERGENCY VEHICLE TURNAROUND.
4. CENTERLINE RADIUS SHALL BE 100' MINIMUM FOR LOOP STREETS AND LOCAL STREETS OVER 800' IN LENGTH. WHERE RIGHT–ANGLED BENDS ARE USED IN THE STREET PATTERN IN LIEU OF THE MINIMUM RADII REQUIRED ABOVE, WIDENING SUFFICIENT TO ACCOMMODATE TRUCK–TURNING MOVEMENTS SHALL BE PROVIDED BY USE OF KNUCKLES OR OTHER APPROPRIATE MEANS.

V STRUCTURAL SECTION

THE MINIMUM STRUCTURAL DESIGN OF PAVING, CURB, GUTTER, AND SIDEWALK SHALL BE IN ACCORDANCE WITH CITY STANDARDS AND SPECIFICATIONS.

VI UTILITIES

1. ADEQUATE PROVISIONS FOR PUBLIC UTILITIES SHALL BE MADE.
2. FIRE HYDRANTS SHALL BE LOCATED ON THE PUBLIC STREET AT THE ENTRANCE TO THE PRIVATE ACCESS WAYS AND ALONG PRIVATE ACCESS WAYS AS REQUIRED BY THE CITY OF PHOENIX WATER AND WATER SERVICES DEPARTMENT STANDARDS.
3. STANDARDS OF CONSTRUCTION AND INSPECTIONS ON PRIVATE ACCESS WAYS SHALL BE TO CITY OF PHOENIX STANDARDS AND SPECIFICATIONS.
4. COSTS OF MAINTENANCE AND REPAIRS OF PRIVATE ACCESS WAYS, LIGHTS, AND NON–PUBLICLY–OWNED UTILITIES ARE TO BE THE RESPONSIBILITY OF THE HOMEOWNER'S ASSOCIATION.
5. PUBLIC WATER AND SEWER LINES ARE ACCEPTABLE WITHIN 28' WIDE OR GREATER PRIVATE ACCESSWAYS WITH AN EXCLUSIVE EASEMENT FOR PUBLIC WATER & OR SEWER.
6. SOME TYPE OF PRIVATE STREET LIGHTS ARE TO BE PROVIDED.

VII SIGNS

1. ALL NEW CURB SHALL BE IMPRINTED WITH THE WORDS, "PRIVATE STREET – NO CITY MAINTENANCE" IN 2" HIGH LETTERS AT EVERY CURB RETURN AND AT EVERY ENTRANCE INTO A NEW PRIVATE PROPERTY SUBDIVISION.
2. A STOP SIGN SHALL BE POSTED AT ALL INTERSECTIONS OF PRIVATE ACCESS WAYS WITH PUBLIC STREETS. SIGNS SHALL BE IN ACCORDANCE WITH THE MANUAL OF UNIFORM TRAFFIC CONTROL DEVICES AND SHALL BE MAINTAINED BY THE HOMEOWNER'S ASSOCIATION.

COLLECTOR STREET

NOT TO SCALE

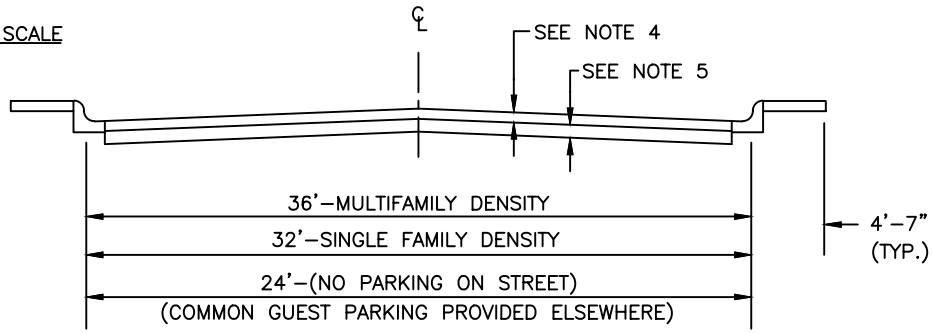

NOT TO SCALE

LOCAL STREET

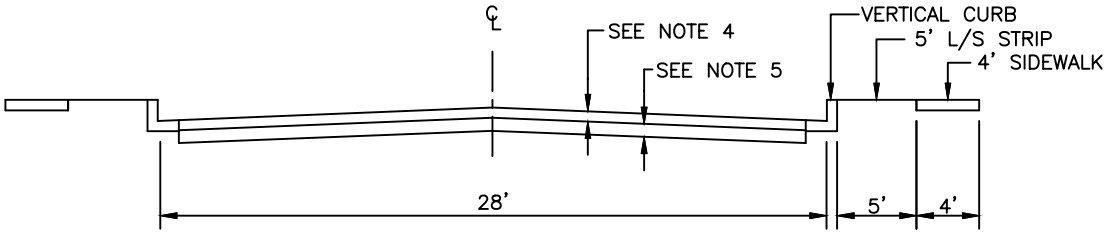

NOT TO SCALE

OPTIONAL LOCAL STREET

NOTES:

1. DRIVEWAY ENTRANCE RETURNS – VERTICAL CURB FACE
   A. COLLECTOR STREET – 35' RADIUS TO FACE OF CURB
   B. LOCAL STREET (36' OR 32' WIDE) – 20' RADIUS TO FACE OF CURB
   C. LOCAL STREET (24' OR 28' WIDE) – 25' RADIUS TO FACE OF CURB
2. SIDEWALK–STD. DET. P1230. THE SITE DEVELOPMENT MANAGER MAY WAIVE THE REQUIREMENT FOR SIDEWALKS, IF SIDEWALKS PROVIDED ELSEWHERE IN THE DEVELOPMENT WILL SATISFACTORILY SERVE THE SAME PURPOSE.
3. CURBS
   A. COLLECTOR STREET & MULTIFAMILY DENSITY – STD. DET. 220–1 TYPE "A" (VERTICAL CURB AND GUTTER)
   B. LOCAL STREET–STD. DET. 220–1 TYPE "C" (ROLL CURB AND GUTTER) OR STD. DET. 221 WHEN SIDEWALK IS ADJACENT, RIBBON CURBS WILL BE PERMITTED WHERE DRAINAGE WILL BE RETAINED OR ADEQUATE DRAINAGE CHANNELS ARE PROVIDED THROUGH ADJACENT PROPERTY. RIBBON CURB MAY NOT BE USED ADJACENT TO SIDEWALK.
4. ASPHALT CONCRETE–2" THICKNESS, CONFORM TO M.A.G. SECT. 321. OTHER TYPES OF SURFACE TREAT–MENT MAY BE PERMITTED BY AUTHORITY OF THE PAVING PLAN REVIEW SUPERVISOR AFTER DEMONSTRATION THAT STRUCTURAL STRENGTH IS EQUAL TO OR GREATER THAN THAT OF THE EXISTING CITY STANDARDS.
5. AGGREGATE BASE COURSE–THICKNESS TO CONFORM WITH P1103. INSTALL TO CONFORM WITH M.A.G. SECT. 310.
6. STREET FURNITURE, FIRE HYDRANTS AND MAJOR PLANTINGS SHALL BE SET BACK A MINIMUM OF 5' FROM THE BACK OF CURB AND BUILDINGS SHALL BE SET BACK A MINIMUM OF 10' FROM THE BACK OF CURB.
7. GARAGES ARE TO BE SETBACK 18' FROM BACK OF SIDEWALK.

DETAIL NO.	City of Phoenix STANDARD DETAIL	PRIVATE ACCESSWAY	APPROVED ACTING CITY ENGINEER 7/31/08 DATE	DETAIL NO.
P1020–2				P1020–2

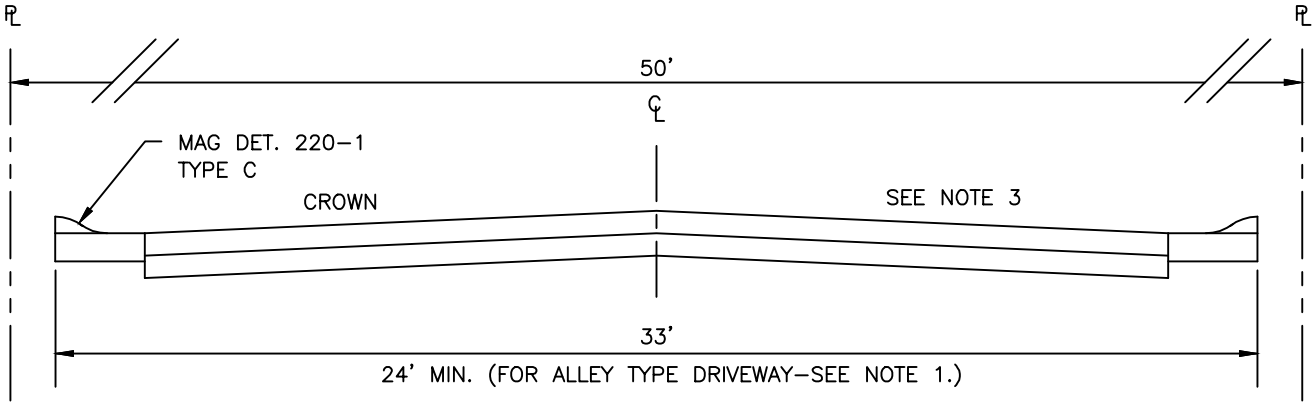

NORMAL CROWN

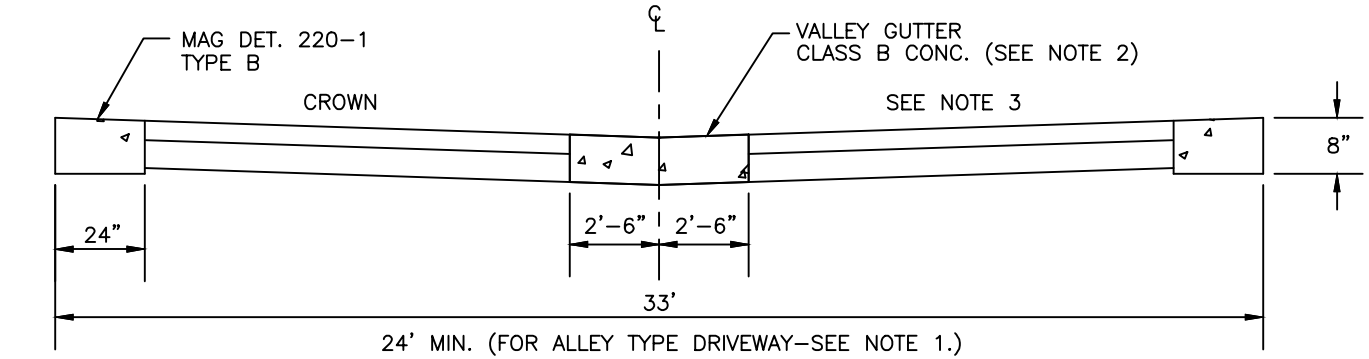

INVERTED CROWN

NOTES:

1. 24' MIN. WIDTH MAY BE APPROVED FOR SHORT DEAD-END OR CUL-DE-SAC DRIVEWAYS OR DRIVEWAYS IN APARTMENT TYPE DEVELOPMENT. A 3' UTILITY EASEMENT TO BE DEDICATED ADJACENT.
2. GRADES
   (A) MAX.-15%. STREET GRADES EXCEEDING 12% SHOULD HAVE MAX. LENGTH OF 600'.
   (B) DESIRABLE MIN. GRADE-0.25%.
   (C) WHEN THE LONGITUDINAL GRADE OF INVERTED CROWN IS LESS THAN 0.30%, CONC. VALLEY GUTTER SHALL BE INSTALLED.
3. CROWN
   (A) 5" TO 6" WHERE STREET GRADE IS LESS THAN 0.25%.
   (B) 4" TO 5" WHERE STREET GRADE EXCEEDS 0.25%.
   (C) INVERTED CROWN 4" TO 6", NOTE: FOR 24' WIDTH DRIVEWAYS DEDUCT 1" FROM ABOVE CROWNS.
4. WITH INVERTED CROWN STREETS, ROLL CURB, WITH DEPRESSED LIP, MAY BE SUBSTITUTED FOR RIBBON TYPE CURB.
5. RIBBON TYPE CURB IS NOT TO BE INSTALLED IF S/W ARE PROPOSED.
6. CONCRETE PER MAG SEC. 725 & 505.

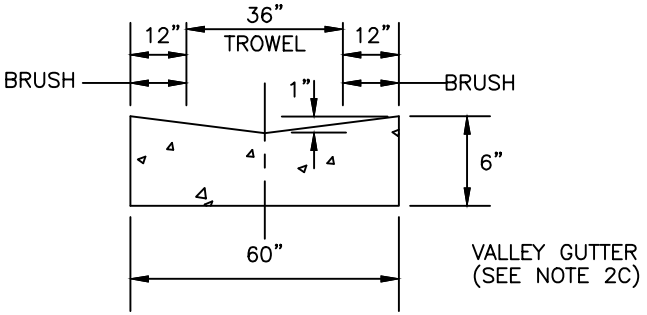

VALLEY GUTTER
(SEE NOTE 2C)

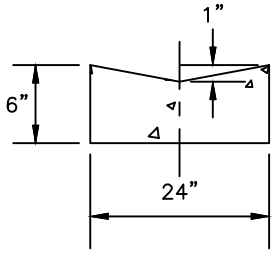

CURB DET.
(ALTERNATE FOR NORMAL CROWN STREET)

DETAIL NO.	City of Phoenix STANDARD DETAIL	PRIVATE DRIVEWAY (STREET) (FOR PLANNED AREAS, SUB-LOTS, SPECIAL PERMITS, ETC.)	APPROVED CITY ENGINEER — DATE 7/9/92	DETAIL NO.
P1021				P1021

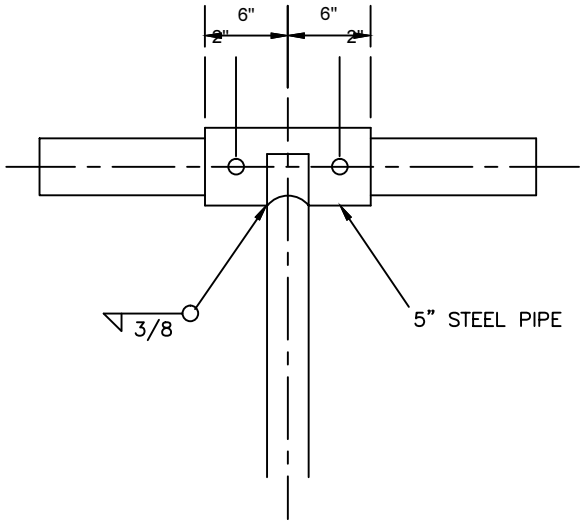

"T" SLEEVE OPTION

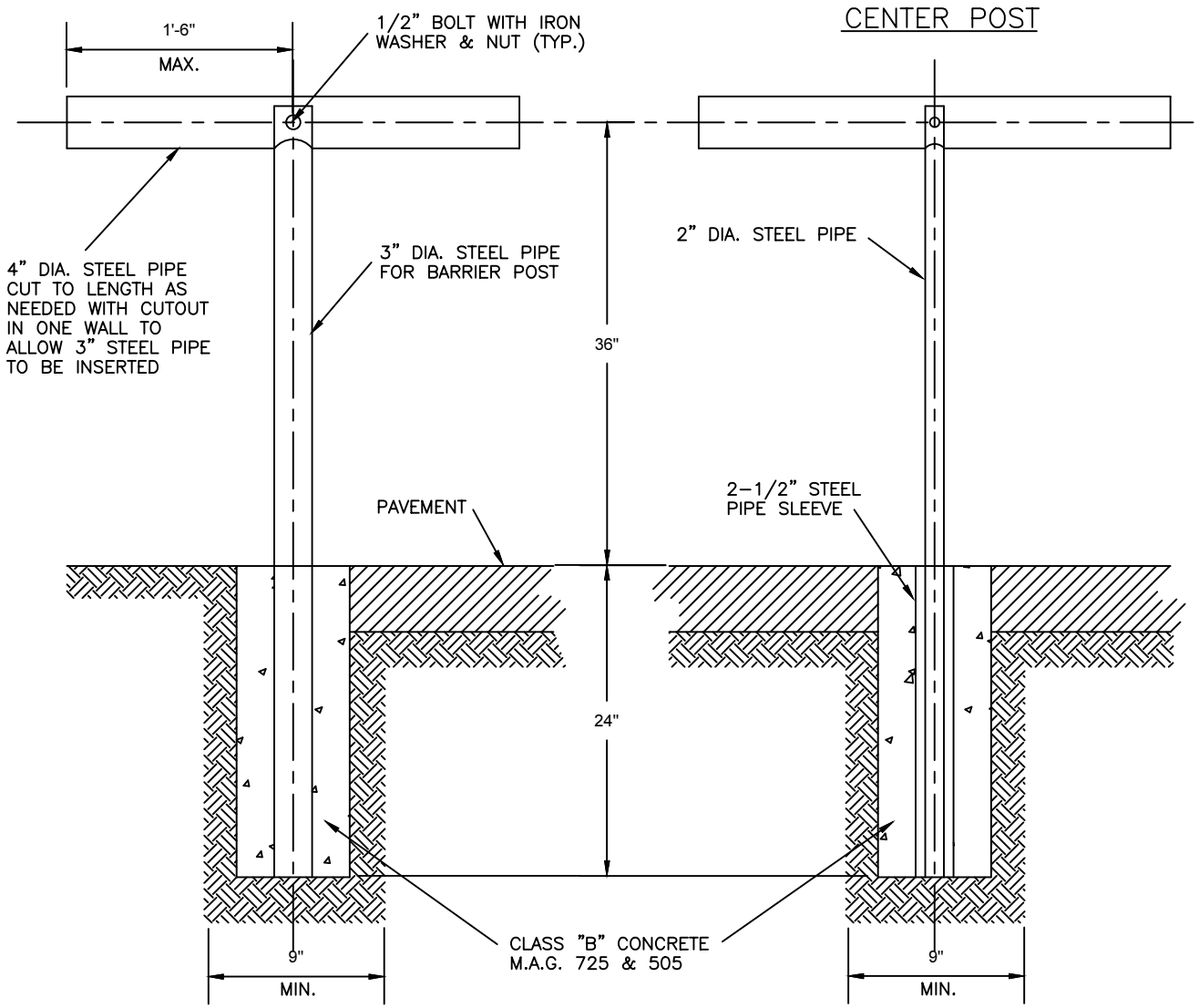

NOTES:

1. 1'-6" MAX. OVERHANG
2. MAX. OVERALL LENGTH IS 33'
3. CENTER POST REQUIRED IF CLEAR SPAN EXCEEDS 15'.
4. CENTER POST SHALL BE 2" DIA. WITH A 2-1/2" DIA. SLEEVE IN THE FOOTING.
5. ALL PIPE IS SCHEDULE 40, GALVANIZED STEEL. (ASTM A 53)

DETAIL NO.	City of Phoenix STANDARD DETAIL	STEEL PIPE BARRICADE	APPROVED	DETAIL NO.
P1024			CITY ENGINEER — DATE 7/9/92	P1024

BASE THICKNESS CHART

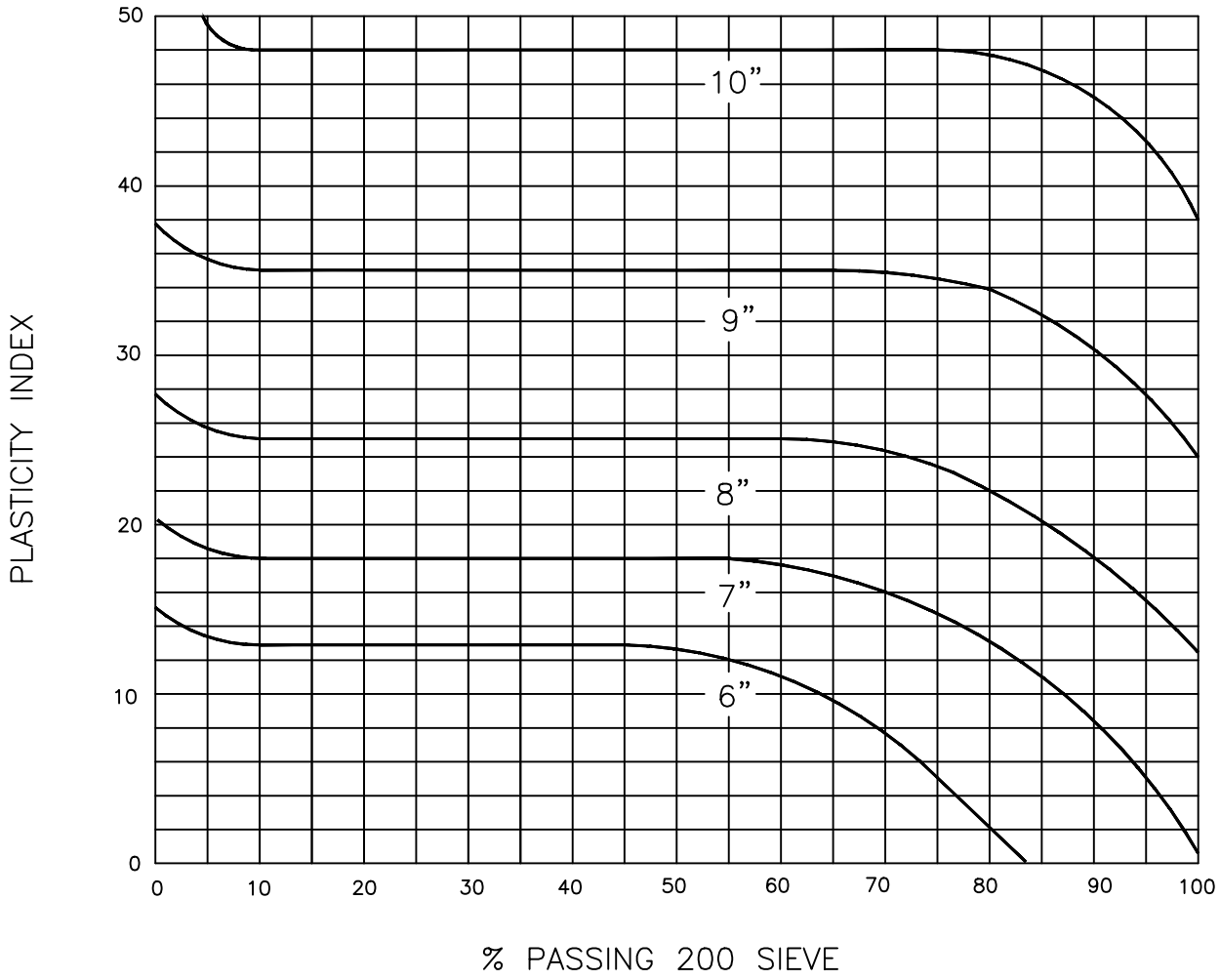

NOTES:

1. TOP 4" OF BASE SHALL BE A.B.C. BALANCE SHALL BE A.B.C. OR SELECT MATERIAL.
2. MINIMUM–DEPTH OF FLEXIBLE BASE COURSE REQUIRED UNDER 2" (MIN.) BITUMINOUS SURFACE.
3. CHART TO BE USED ONLY WHEN "R" VALUES ARE NOT AVAILABLE.

DETAIL NO.	City of Phoenix STANDARD DETAIL	DEPTH OF BASE COURSE RESIDENTIAL STREET	APPROVED CITY ENGINEER 7/9/92 DATE	DETAIL NO.
P1102				P1102

BASE THICKNESS CHART

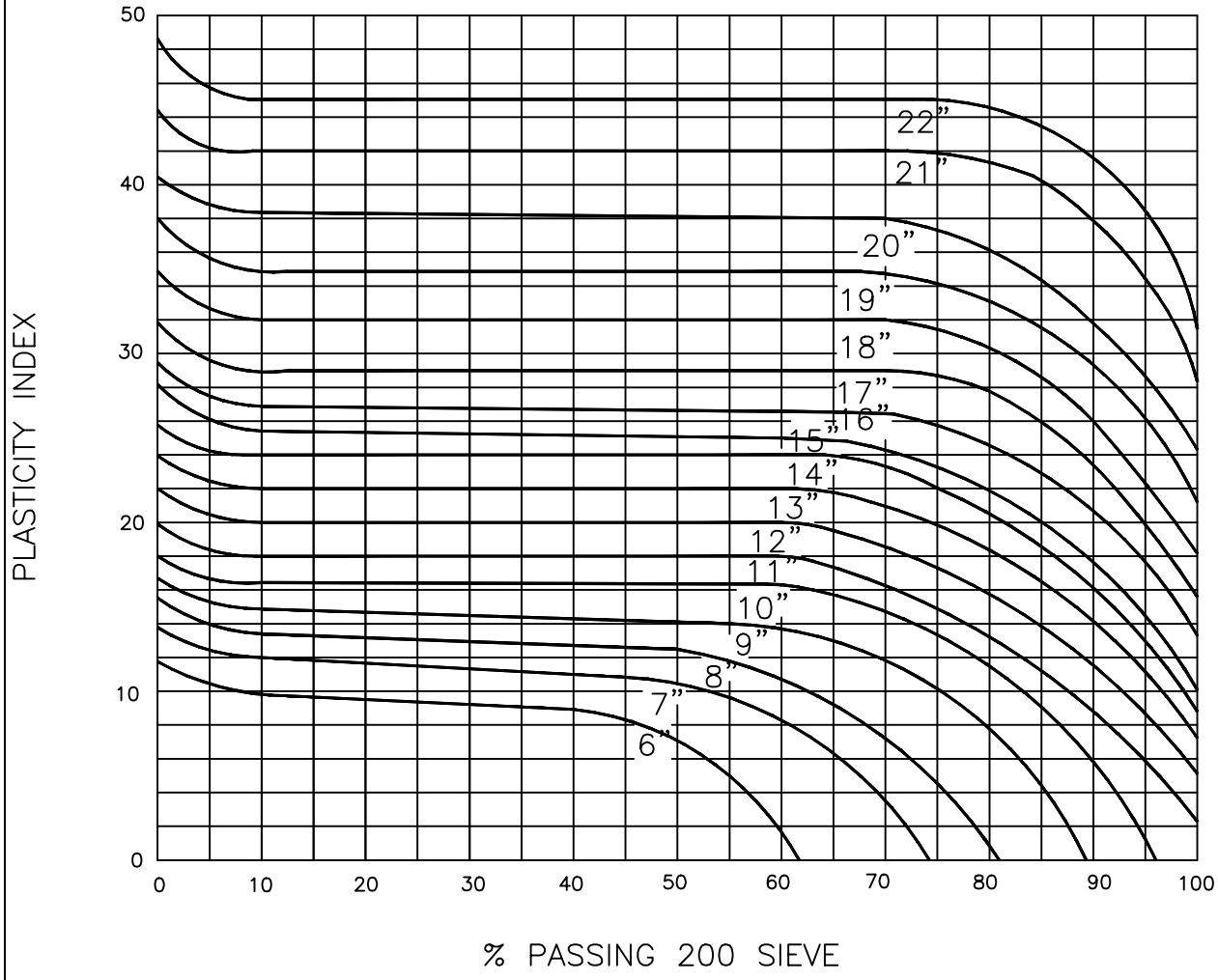

NOTES:

1. TOP 4" OF BASE SHALL BE A.B.C. BALANCE SHALL BE A.B.C. OR SELECT MATERIAL.
2. MINIMUM–DEPTH OF FLEXIBLE BASE COURSE REQUIRED UNDER 2" (MIN.) BITUMINOUS SURFACE.
3. CHART TO BE USED ONLY WHEN "R" VALUES ARE NOT AVAILABLE.

DETAIL NO.	City of Phoenix STANDARD DETAIL	DEPTH OF BASE COURSE (LOCAL COMMERCIAL & LIGHT INDUSTRIAL STREETS)	APPROVED CITY ENGINEER — DATE 7/9/92	DETAIL NO.
P1103				P1103

BASE THICKNESS CHART

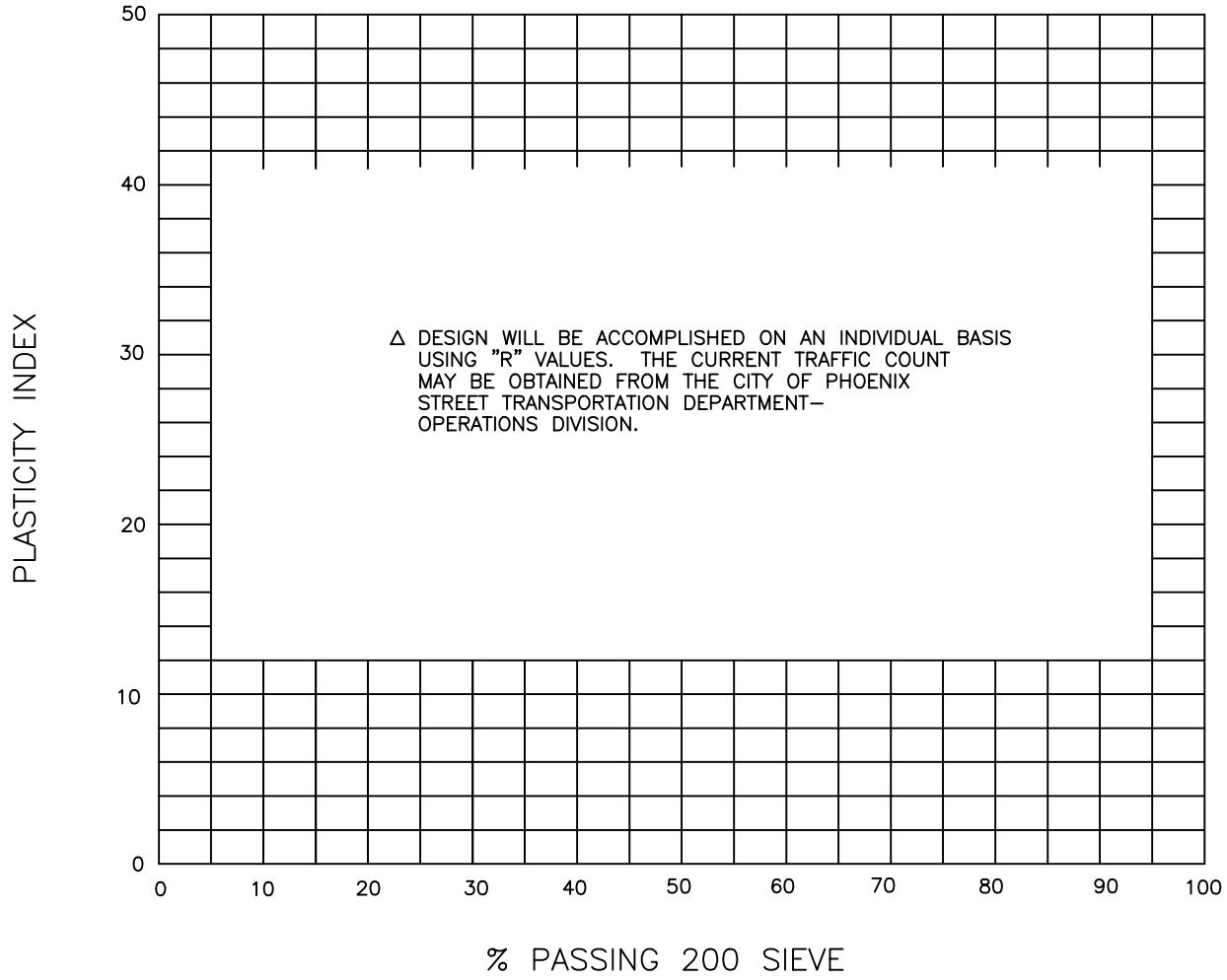

NOTES:

1. TOP 4" OF BASE SHALL BE A.B.C. BALANCE SHALL BE A.B.C. OR SELECT MATERIAL.
2. MINIMUM–DEPTH OF FLEXIBLE BASE COURSE REQUIRED UNDER 5" (MIN.) BITUMINOUS SURFACE.
3. CHART TO BE USED ONLY WHEN "R" VALUES ARE NOT AVAILABLE.

DETAIL NO.	City of Phoenix STANDARD DETAIL	DEPTH OF BASE COURSE (MAJOR STREETS & HEAVY INDUSTRIAL STREETS)	APPROVED Mario Saldamando CITY ENGINEER 2/11/02 DATE	DETAIL NO.
P1104				P1104

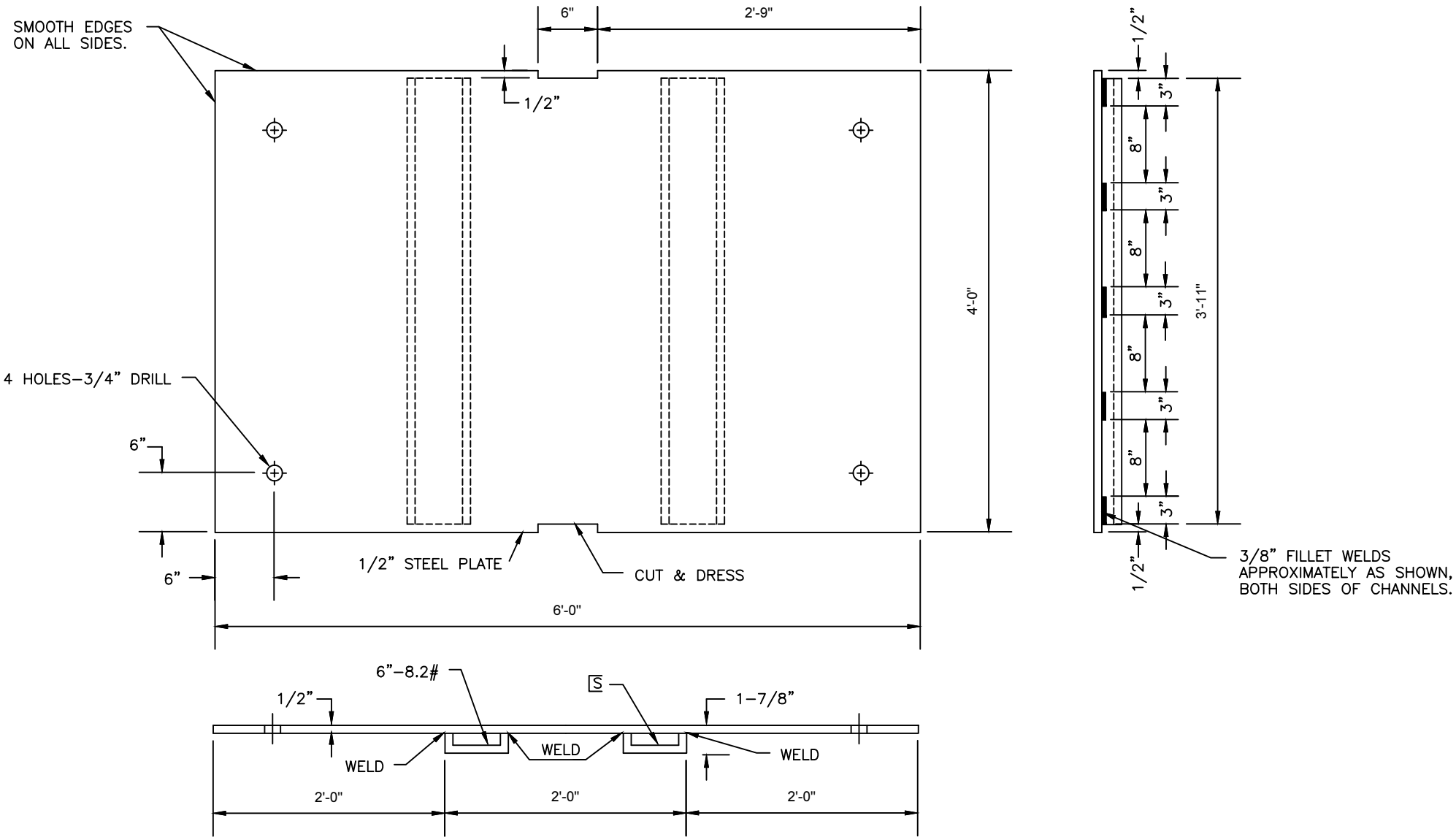

DETAIL NO.	City of Phoenix STANDARD DETAIL	STEEL COVER FOR OPEN TRENCHES	APPROVED	DETAIL NO.
P1105			CITY ENGINEER — DATE 7/9/92	P1105

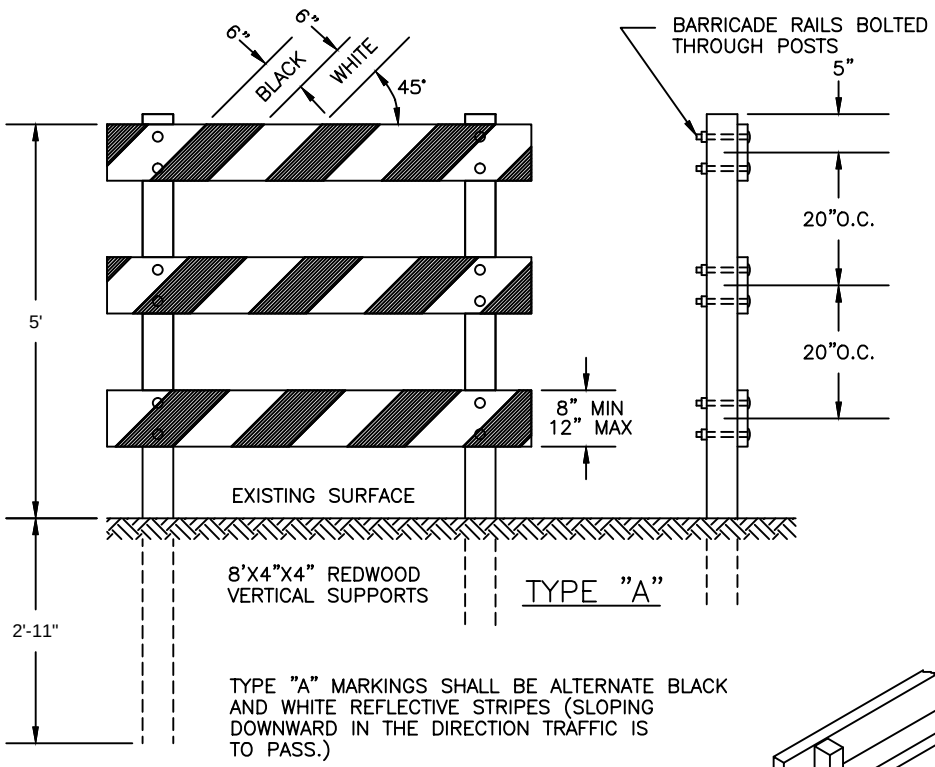

TYPE "A" MARKINGS SHALL BE ALTERNATE BLACK AND WHITE REFLECTIVE STRIPES (SLOPING DOWNWARD IN THE DIRECTION TRAFFIC IS TO PASS.)

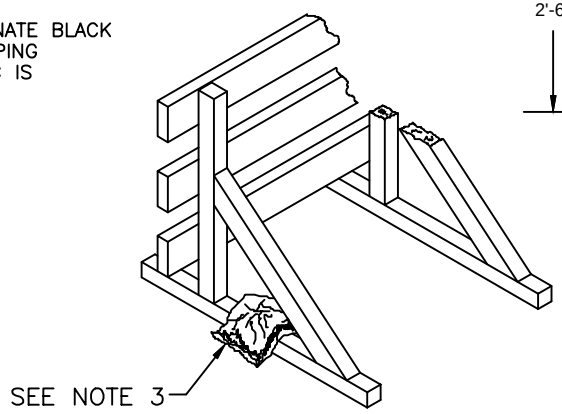

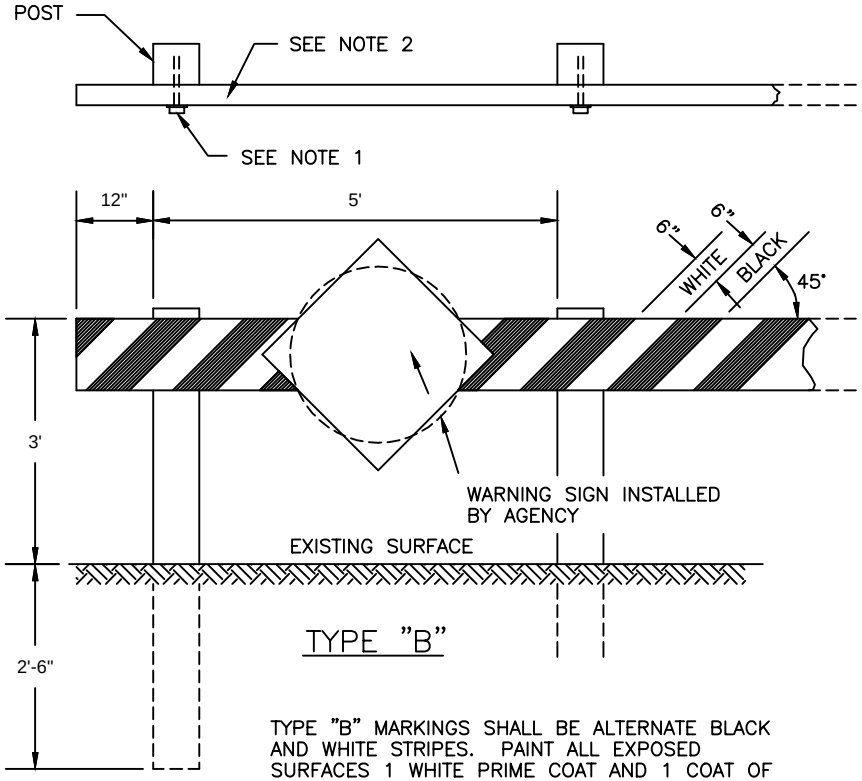

TYPE "B" MARKINGS SHALL BE ALTERNATE BLACK AND WHITE STRIPES. PAINT ALL EXPOSED SURFACES 1 WHITE PRIME COAT AND 1 COAT OF WHITE EXTERIOR ENAMEL BLACK STRIPING, 1 COAT OF EXTERIOR BLACK ENAMEL.

NOTES:

1. FASTEN WITH 1/2"X8" LAG SCREWS WITH 2 FLAT WASHERS OR (2) 5/8" BOLTS, WITH 4 FLAT WASHERS.
2. 3"X10" DOUGLAS FIR PLANK (LENGTH TO BE DETERMINED ON PLANS).
3. WHEN BARRICADE (TYPE "A") IS CONSTRUCTED ON BASED IN-STEAD OF POSTS SET INTO THE GROUND, IT MAY BE DESIRABLE TO BALLAST THE BASES WITH SAND BAGS OR BY STAKING TO PROVIDE RESISTANCE TO OVERTURNING DURING PERIODS OF HIGH WINDS.

DETAIL NO.	City of Phoenix STANDARD DETAIL	BARRICADE	APPROVED	DETAIL NO.
P1106			CITY ENGINEER — DATE 7/9/92	P1106

ALLOWABLE V.C.P. TRENCH LOADING

PIPE SIZE (INCHES)	V.C.P. THREE EDGE BEARING STRENGTH MIN.	ALLOWABLE TRENCH LOAD PER CLASS OF BEDDING SOIL WT.=130#/CU.FT. SAFETY FACTOR=1.5		
		CLASS A–1 L.F.=3.4	CLASS A L.F.=2.8	*CLASS B–1 L.F.=2.2
8	2200	4987	4107	3227
10	2400	5440	4480	3520
12	2600	5893	4853	3813
15	2900	6573	5413	4253
18	3300	7480	6160	4840
21	3850	8727	7187	5647
24	4400	9973	8213	6453
27	4700	10653	8773	6893
30	5000	11333	9333	7333
33	5500	12467	10267	8067
36	6000	13600	11200	8800
39	6600	14960	12320	9680

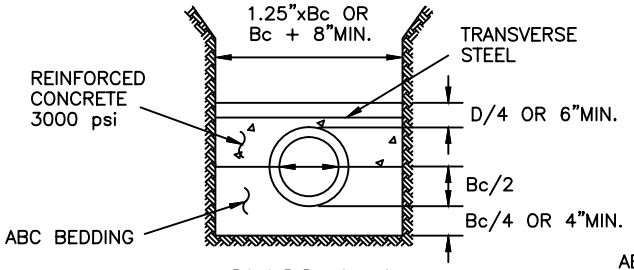

CLASS A–1

LOAD FACTOR: 3.4 REINFORCED CONCRETE, p=0.4%

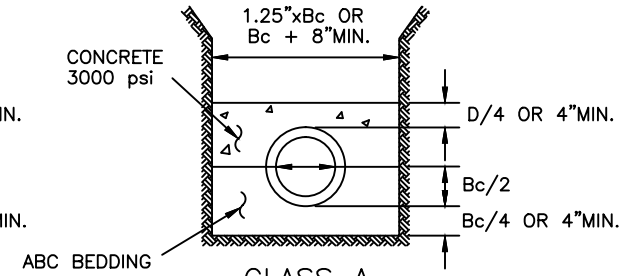

CLASS A

LOAD FACTOR: 2.8 PLAIN CONCRETE

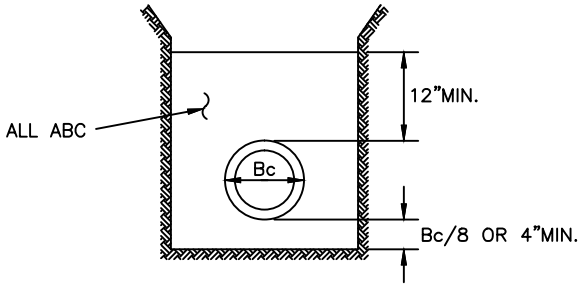

*CLASS B–1

LOAD FACTOR: 2.2 ABC ENCASEMENT

NOTE:

SECTION 601 APPLIES FOR FOUNDATION, BEDDING, BACKFILL, MATERIALS AND COMPACTION.

8" V.C.P. 3 EDGE BEARING STRENGTH=2200#/L.F.							
FILL OVER TOP OF PIPE (FT.)	TRENCH WIDTH AT TOP OF PIPE						FILL OVER TOP OF PIPE (FT.)
	18"	24"	30"	36"	42"	WIDER THAN 42"	
	CLASS OF BEDDING						
6	B-1						6
8							8
10							10
12							12
14							14
16							16
18							18
20			A				20

10" V.C.P. 3 EDGE BEARING STRENGTH=2400#/L.F.							
FILL OVER TOP OF PIPE (FT.)	TRENCH WIDTH AT TOP OF PIPE						FILL OVER TOP OF PIPE (FT.)
	24"	30"	36"	42"	48"	WIDER THAN 48"	
	CLASS OF BEDDING						
6	B-1						6
8							8
10							10
12							12
14							14
16							16
18							18
20			A				20

SEE DETAIL P1120 FOR BEDDING DETAILS

DETAIL NO.	City of Phoenix STANDARD DETAIL	8" & 10" V.C.P. TRENCH LOADING	APPROVED	DETAIL NO.
P1121			Kenny W Harris CITY ENGINEER — 7/9/92 DATE	P1121

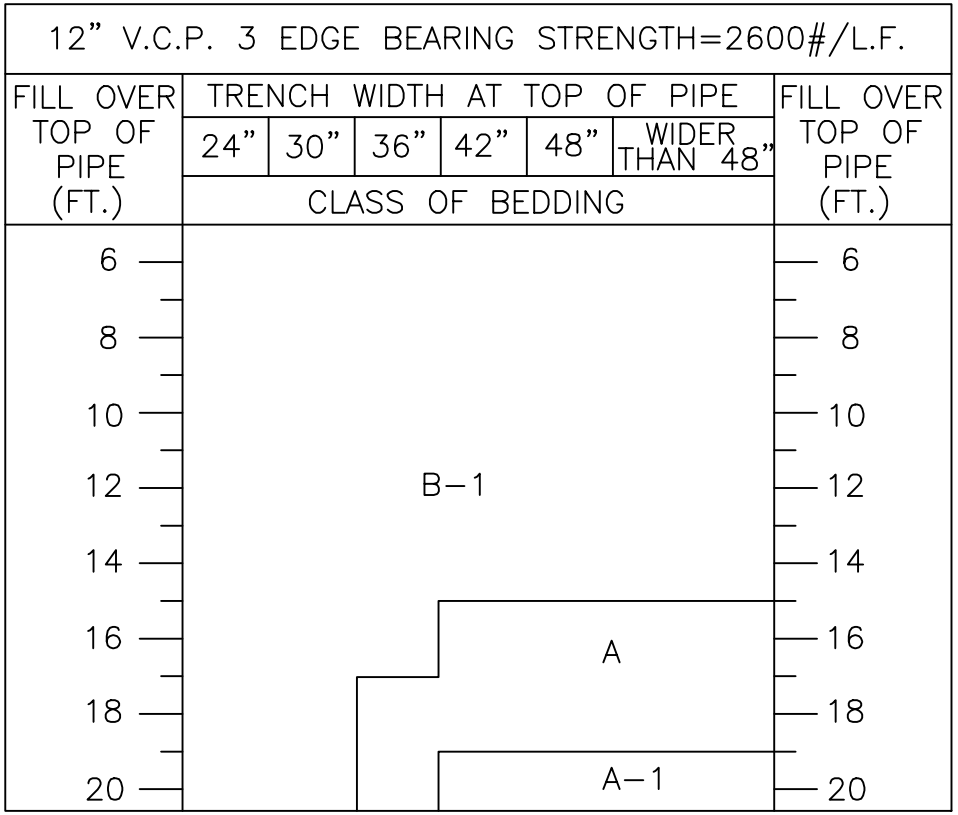

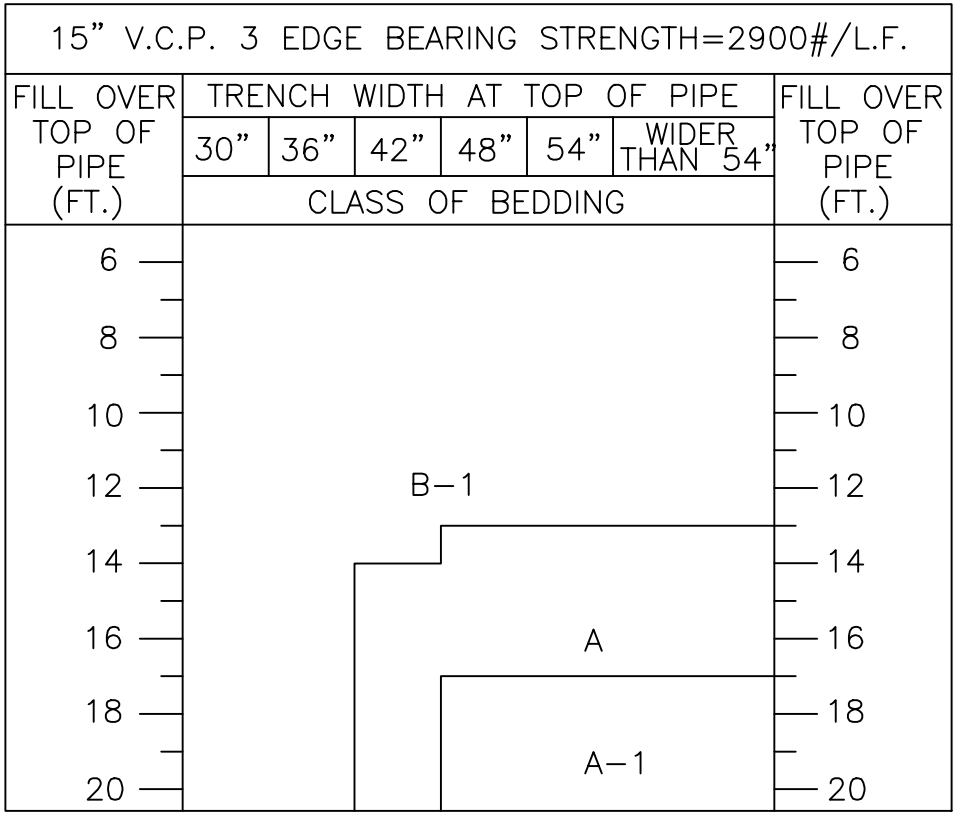

SEE DETAIL P1120 FOR BEDDING DETAILS

DETAIL NO.	City of Phoenix STANDARD DETAIL	12" & 15" V.C.P. TRENCH LOADING	APPROVED CITY ENGINEER 7/9/92 DATE	DETAIL NO.
P1122				P1122

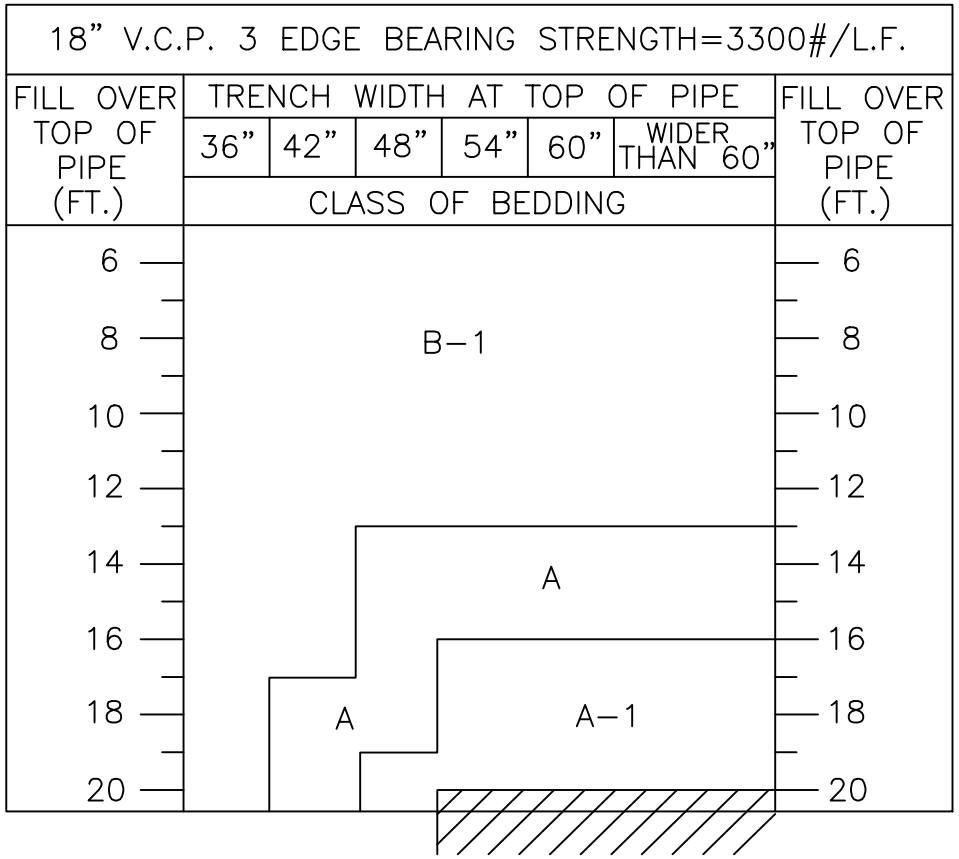

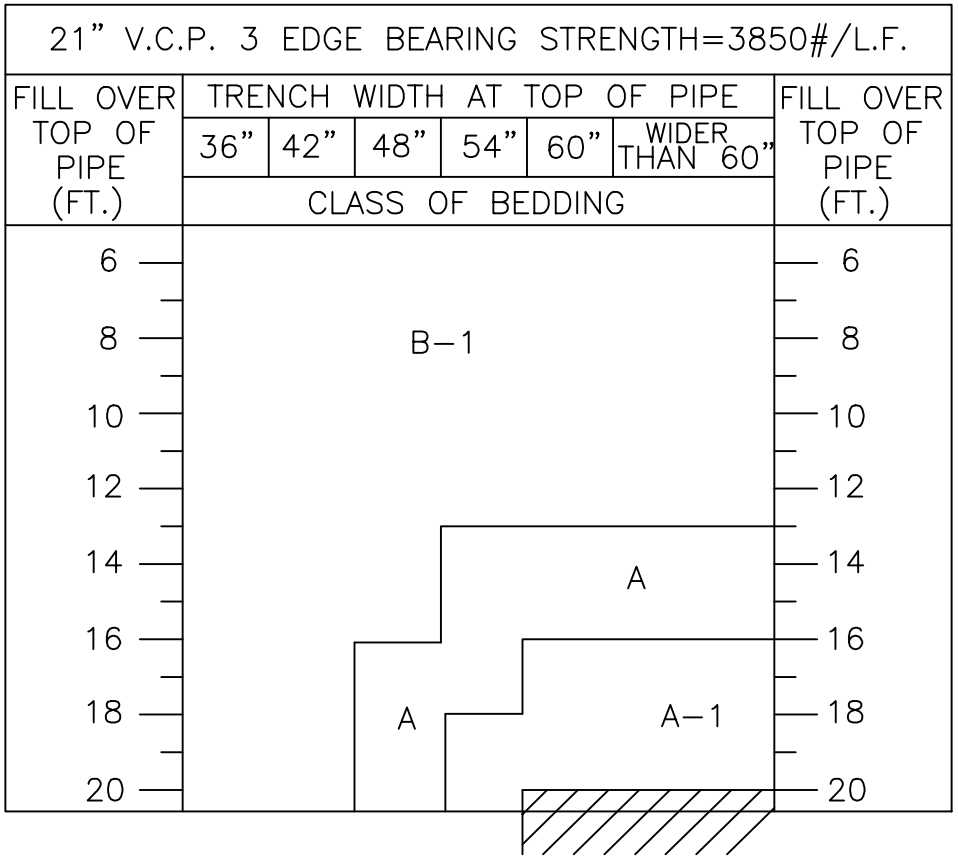

REQUIRES DESIGN ACTION

SEE DETAIL P1120 FOR BEDDING DETAILS

DETAIL NO.	City of Phoenix STANDARD DETAIL	18" & 21" V.C.P. TRENCH LOADING	APPROVED CITY ENGINEER 7/9/92 DATE	DETAIL NO.
P1123				P1123

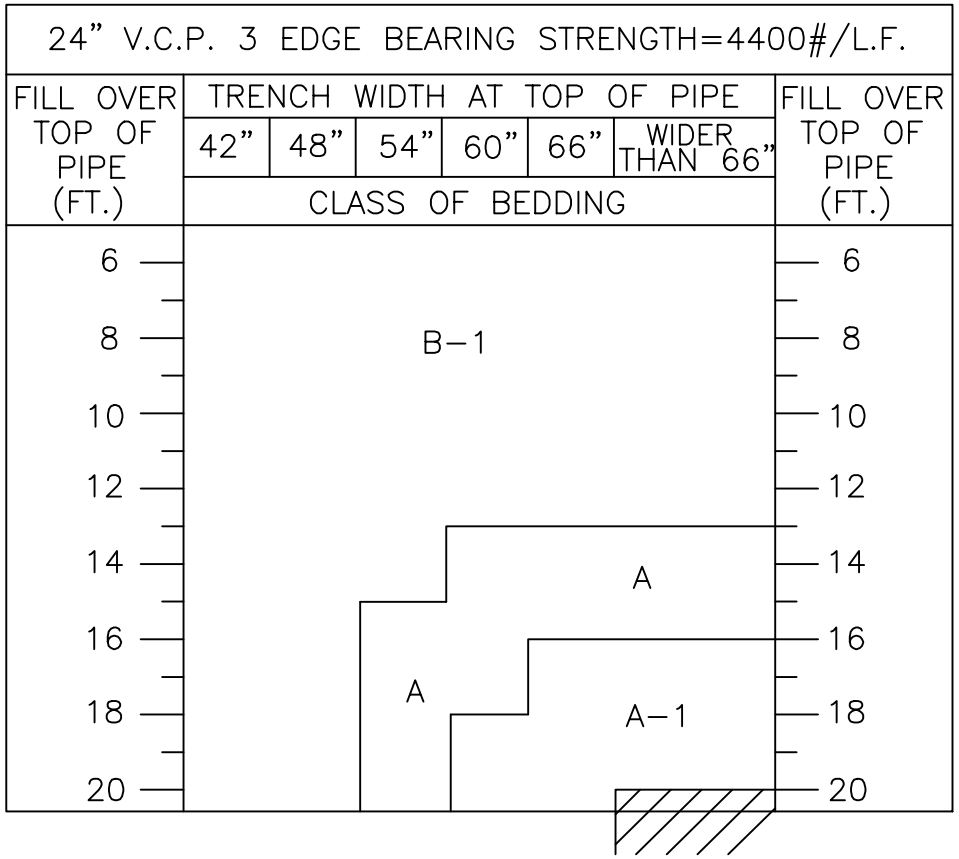

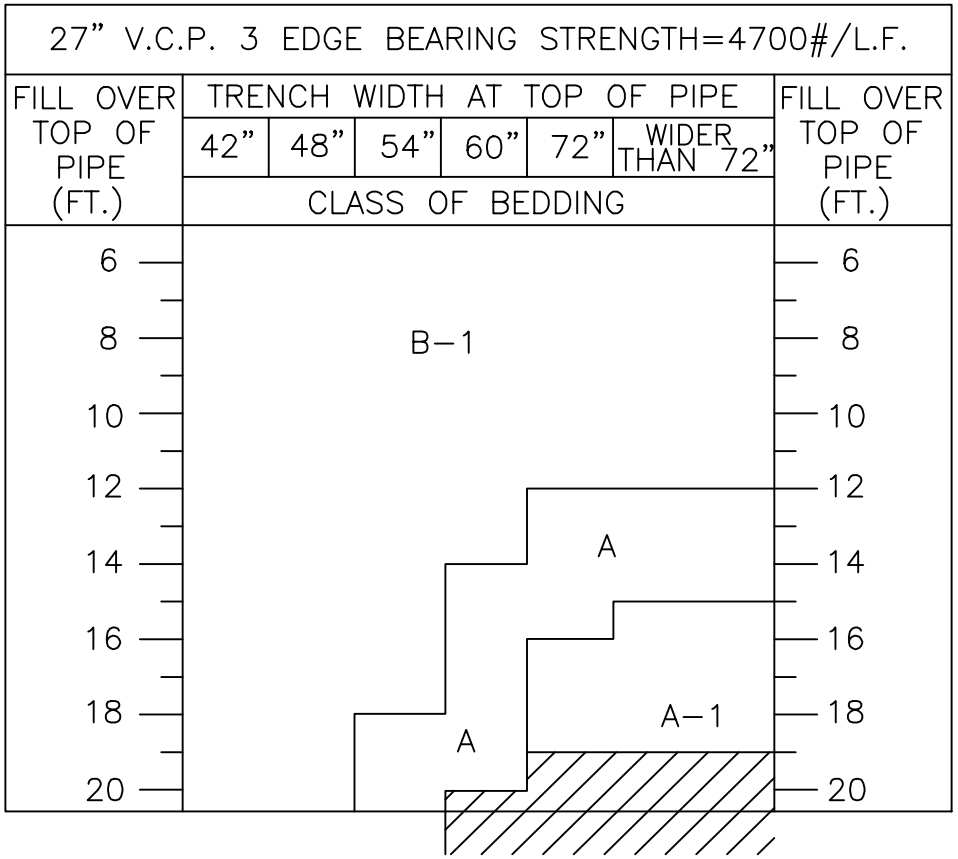

REQUIRES DESIGN ACTION

SEE DETAIL P1120 FOR BEDDING DETAILS

DETAIL NO.	City of Phoenix STANDARD DETAIL	24" & 27" V.C.P. TRENCH LOADING	APPROVED CITY ENGINEER 7/9/92 DATE	DETAIL NO.
P1124				P1124

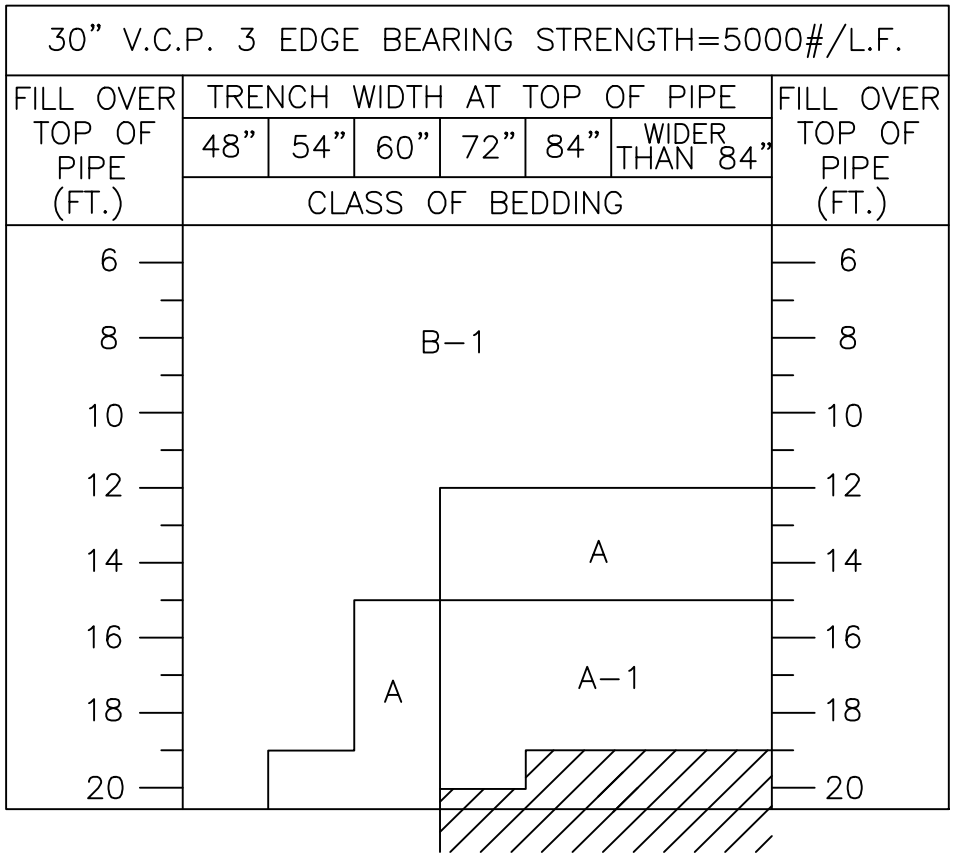

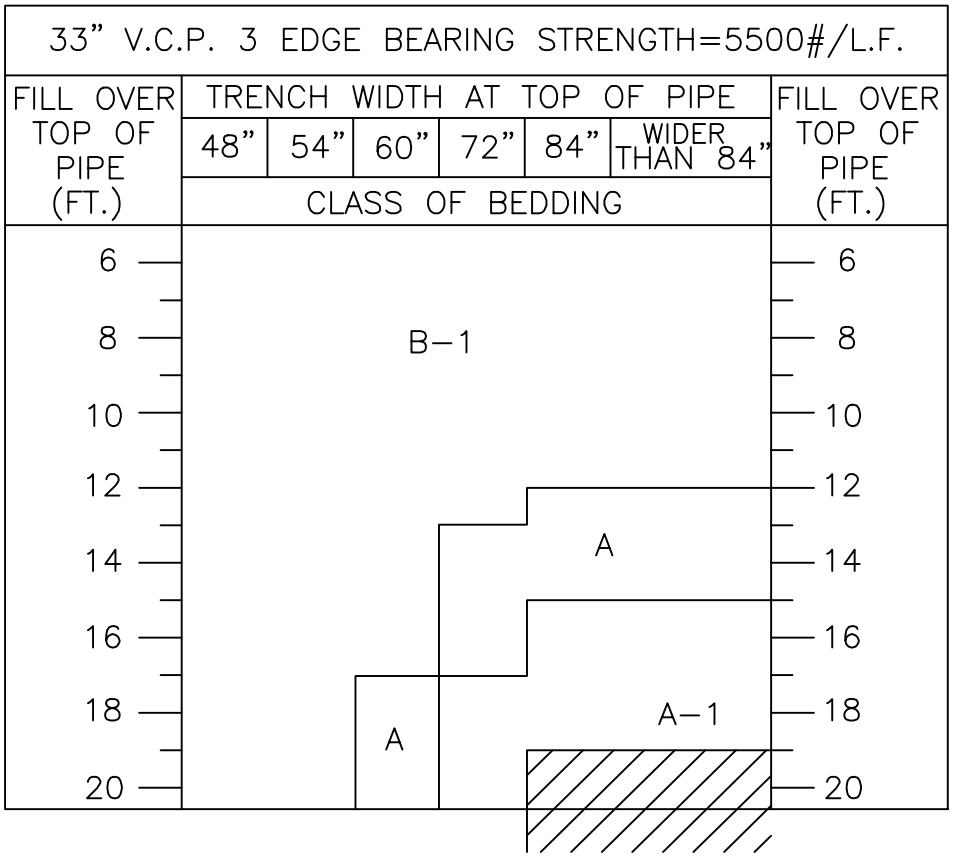

REQUIRES DESIGN ACTION

SEE DETAIL P1120 FOR BEDDING DETAILS

DETAIL NO.	City of Phoenix STANDARD DETAIL	30" & 33" V.C.P. TRENCH LOADING	APPROVED CITY ENGINEER 7/9/92 DATE	DETAIL NO.
P1125				P1125

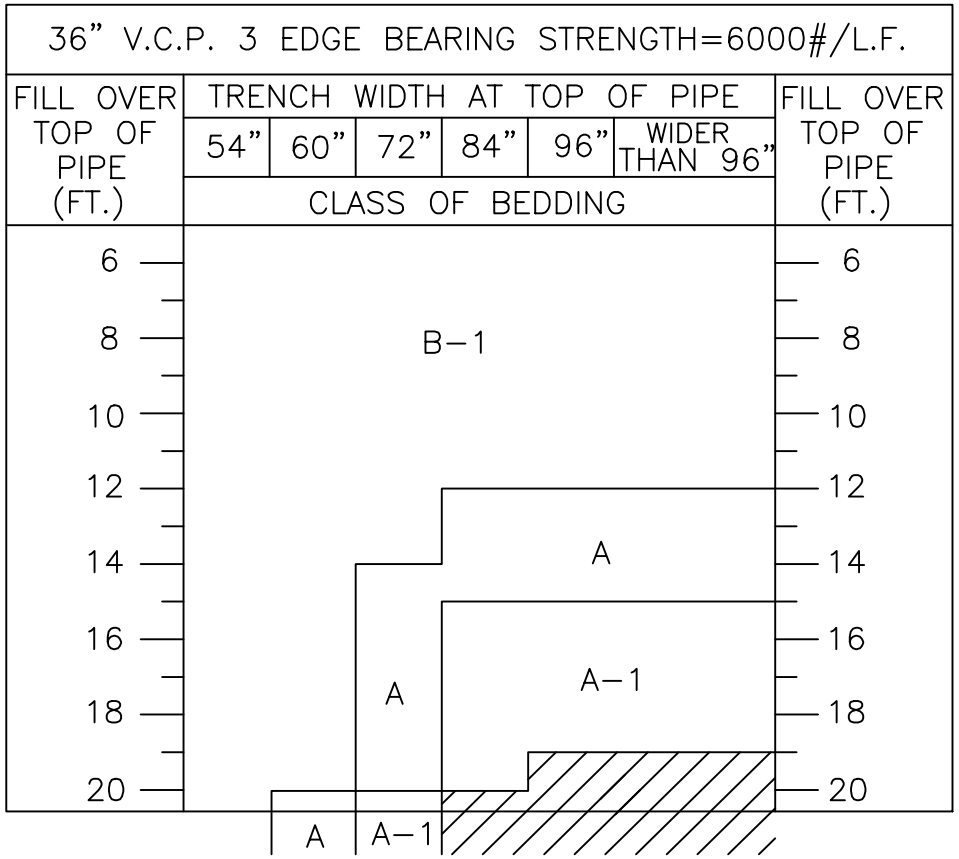

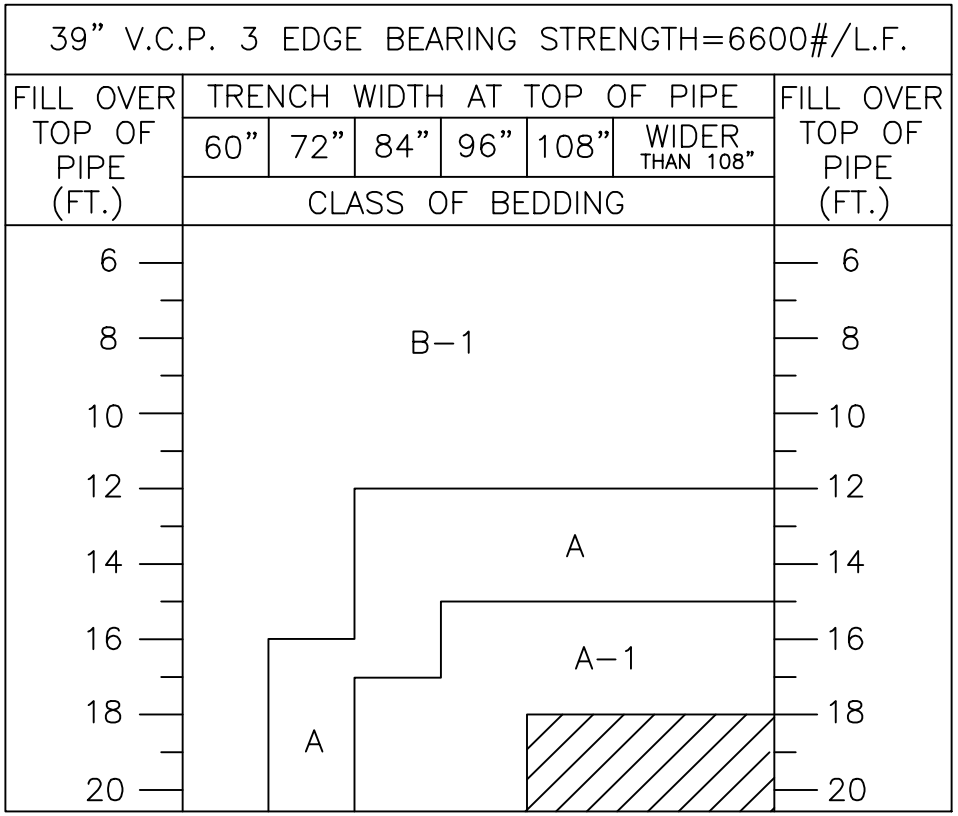

REQUIRES DESIGN ACTION

SEE DETAIL P1120 FOR BEDDING DETAILS

DETAIL NO.	City of Phoenix STANDARD DETAIL	36" & 39" V.C.P. TRENCH LOADING	APPROVED CITY ENGINEER 7/9/92 DATE	DETAIL NO.
P1126				P1126

ALLOWABLE V.C.P. TRENCH LOADING

PIPE SIZE (INCHES)	V.C.P. THREE EDGE BEARING STRENGTH MIN.	ALLOWABLE TRENCH WIDTH PER CLASS OF BEDDING SOIL WT.=130#/CU.FT. SAFETY FACTOR=1.5		
		CLASS A–1 L.F.=3.4	CLASS A L.F.=2.8	*CLASS B–1 L.F.=2.2
42	7000	15867	13067	10267

SEE DETAIL P1120 FOR BEDDING DETAILS

REQUIRES DESIGN ACTION

42" V.C.P. 3 EDGE BEARING STRENGTH=7000#/L.F.

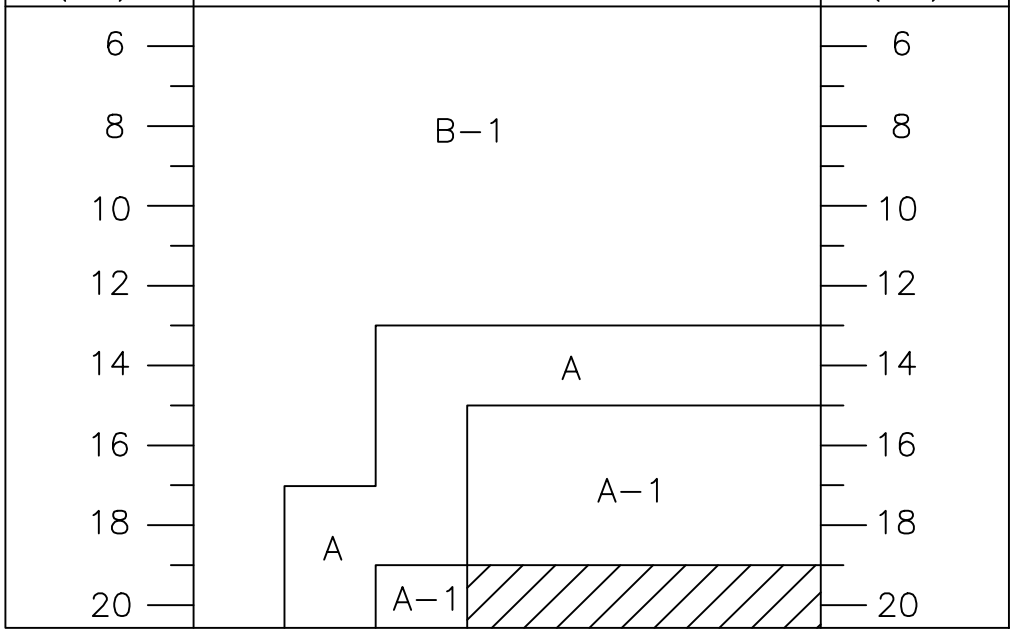

DETAIL NO.	City of Phoenix STANDARD DETAIL	42" V.C.P. TRENCH LOADING	APPROVED CITY ENGINEER 7/9/92 DATE	DETAIL NO.
P1127				P1127

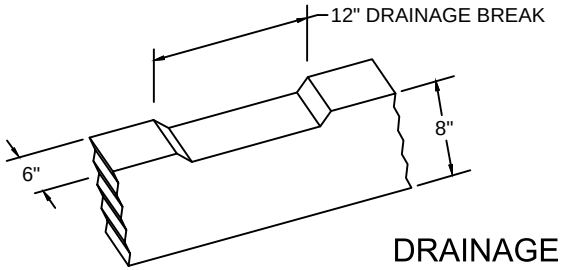

NOTCH 1 " DEEP WITH 45° CUT (TYP.) AS NEEDED TO PROVIDE DRAINAGE

DRAINAGE CUT

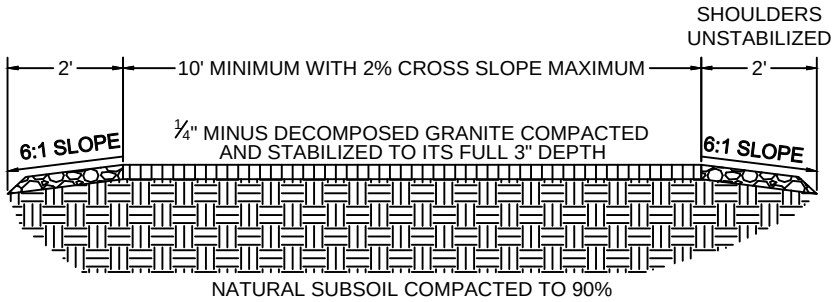

NOT TO SCALE

MULTI-USE TRAIL IN DECOMPOSED GRANITE

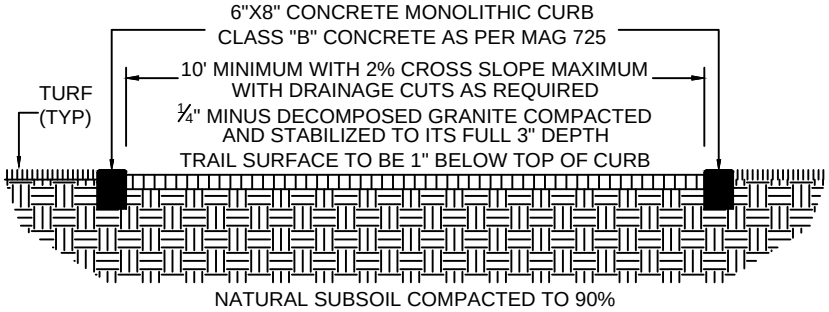

NOT TO SCALE

MULTI-USE TRAIL IN TURF

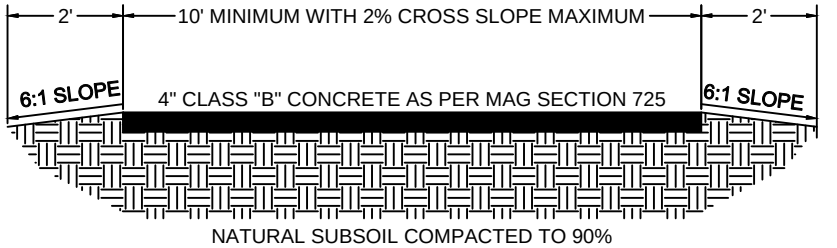

NOT TO SCALE

SHARED USE PATH

NOTES:
1. NO RUNNING SLOPE SHALL EXCEED 5%. IF RUNNING SLOPE EXCEEDS 5%, TRAIL MUST CONFORM TO AMERICANS WITH DISABILITIES ACT GUIDELINES.
2. TRAILS WILL NOT EXCEED 8% SLOPES, SLOPES 5-8% NOT TO EXCEED 30' DISTANCE WITHOUT 5' LANDING. REFER TO U.S. DEPARTMENT OF JUSTICE WEBSITE FOR MORE INFORMATION.
3. SHARED-USE PATH WILL FOLLOW P1230 SIDEWALK DETAILS & SPECIFICATIONS FOR CONCRETE SIDEWALK.
4. MULTI-USE TRAIL TO BE LOCATED WITH AN EXCLUSIVE MINIMUM 30' PUBLIC MULTI-USE TRAIL EASEMENT THAT MAY INCLUDE A PUE.
6. SHARED-USE PATH TO BE LOCATED WITHIN A 20' PUBLIC SIDEWALK EASEMENT.
7. MULTI-USE TRAILS AND SHARED-USE PATHS LOCATED WITHIN OR ADJACENT TO OPEN SPACE OR WASH CORRIDORS WILL BE LOCATED WITHIN A MINIMUM 25' PUBLIC TRAIL EASEMENT.

DETAIL NO.	City of Phoenix STANDARD DETAIL	MULTI-USE TRAILS AND SHARED-USE PATHS	APPROVED ACTING CITY ENGINEER 7/31/08 DATE	DETAIL NO.
P1130				P1130

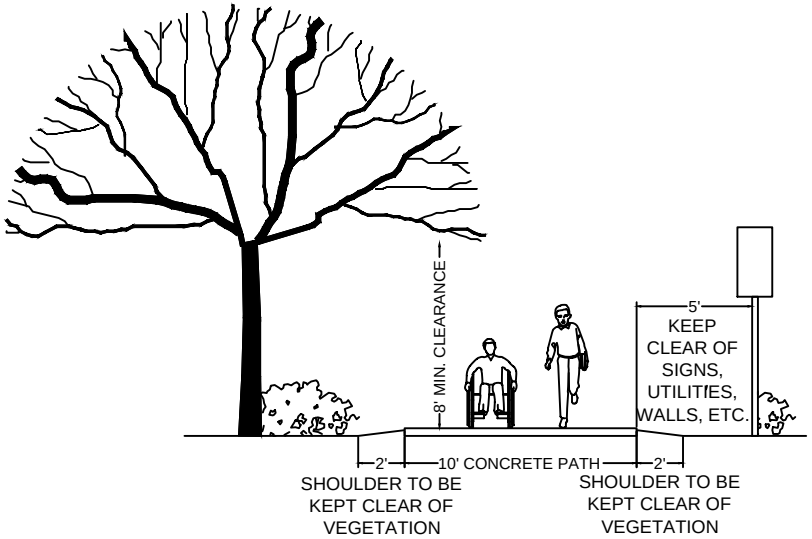

NOT TO SCALE

SHARED-USE PATHS - OBSTRUCTION CLEARANCES

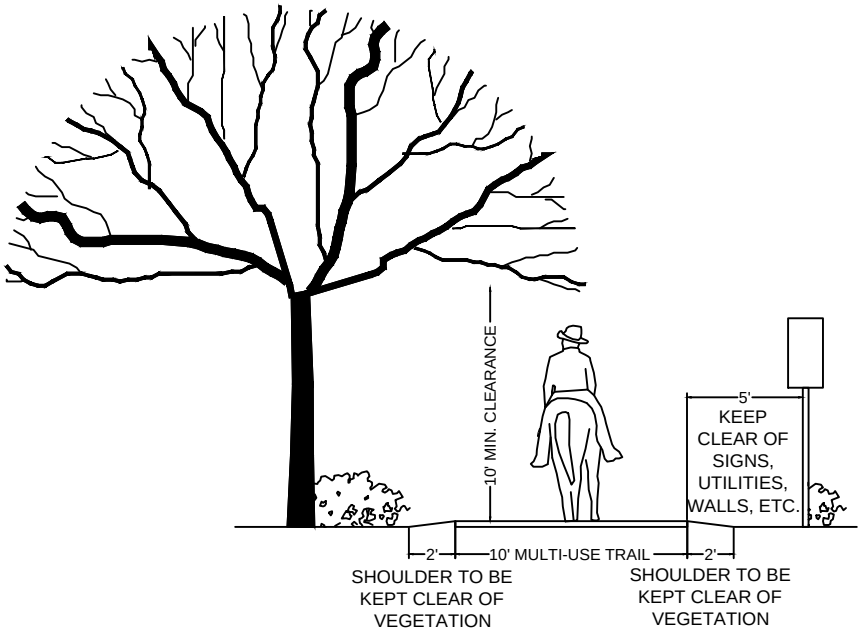

NOT TO SCALE

MULTI-USE TRAILS - OBSTRUCTION CLEARANCES

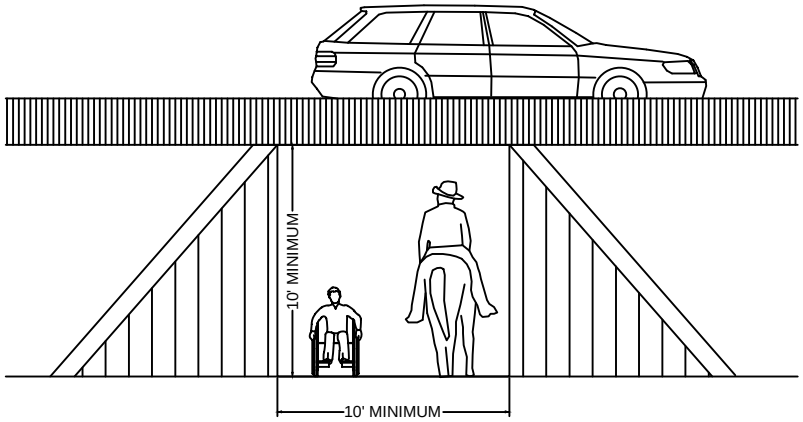

NOT TO SCALE

UNDERPASS DIMENSIONS

DETAIL NO.	City of Phoenix STANDARD DETAIL	VERTICAL CLEARANCE, MULTI–USE, SHARED–USE, AND UNDERPASS/BRIDGE CLEARANCE	APPROVED ACTING CITY ENGINEER 7/31/08 DATE	DETAIL NO.
P1131				P1131

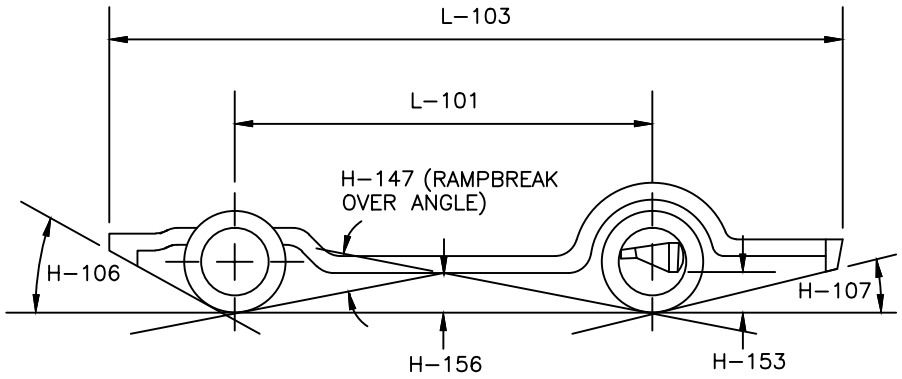

NOTES

1. IF THE SUM OF THE STREET CROWN SLOPE, NORMALLY A NEGATIVE SLOPE OF 1.72° (0.03), AND THE POSITIVE SLOPE IF THE DRIVEWAY IS EQUAL TO OR EXCEEDS THE ANGLE OF DEPARTURE, 8.3° (0.146), THE DRIVEWAY MUST BE REDESIGNED TO A POSITIVE SLOPE OF NOT MORE THAN 6° (0.105).
2. ADDITIONAL INCREASES IN THE POSITIVE SLOPE MAY BE MADE AT TEN (10) FOOT INTERVALS. EACH CHANGE CANNOT EQUAL OR EXCEED THE ANGLE OF DEPARTURE, 8.3° (0.146).
3. CHANGES FROM A POSITIVE SLOPE TO A NEGATIVE SLOPE CANNOT EQUAL OR EXCEED THE BREAKOVER ANGLE OF 5.53° (0.097).
4. WHEN MAKING CHANGE FROM A NEGATIVE SLOPE TO A POSITIVE SLOPE, THE SUM OF THE TWO SLOPES CANNOT EQUAL OR EXCEED THE ANGLE OF DEPARTURE, 8.3° (0.146).

GROUND CLEARANCE DIMENSIONS

H–106 – ANGLE OF APPROACH = 8.6 DEGREES
H–107 – ANGLE OF DEPARTURE = 8.3 DEGREES
H–147 – RAMP BREAKOVER ANGLE = 5.53 DEGREES
H–153 – REAR AXLE TO GROUND = 5.5 INCHES
H–156 – MINIMUM GROUND CLEARANCE = 3.1 INCHES
L–101 – WHEELBASE = 9.88 FEET
L–103 – VEHICLE LENGTH = 18.42 FEET

THESE DIMENSIONS ARE FROM THE 1982 MOTOR VEHICLE MANUFACTURERS ASSOCIATION PUBLICATION. COPIES MAY BE OBTAINED FROM TECHNICAL AFFAIRS DIVISION, MOTOR VEHICLE MANUFACTURERS ASSOCIATION, 300 NEW CENTER BUILDING, DETROIT, MICHIGAN 48202.

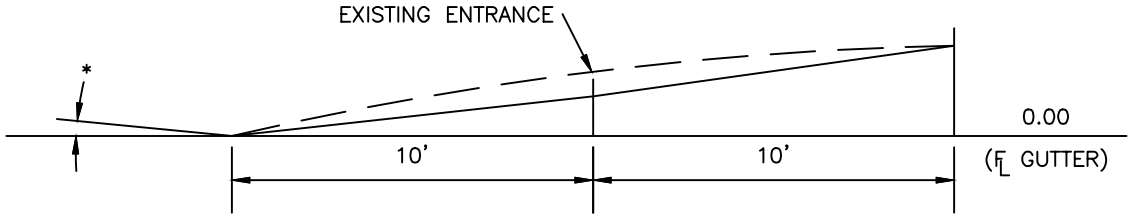

* 0.03% MAXIMUM TRANSVERSE SLOPE ALLOWABLE

DETAIL NO.	City of Phoenix STANDARD DETAIL	MAXIMUM DRIVEWAYS & ALLEYS SLOPE	APPROVED CITY ENGINEER 5/31/94 DATE	DETAIL NO.
P1164				P1164

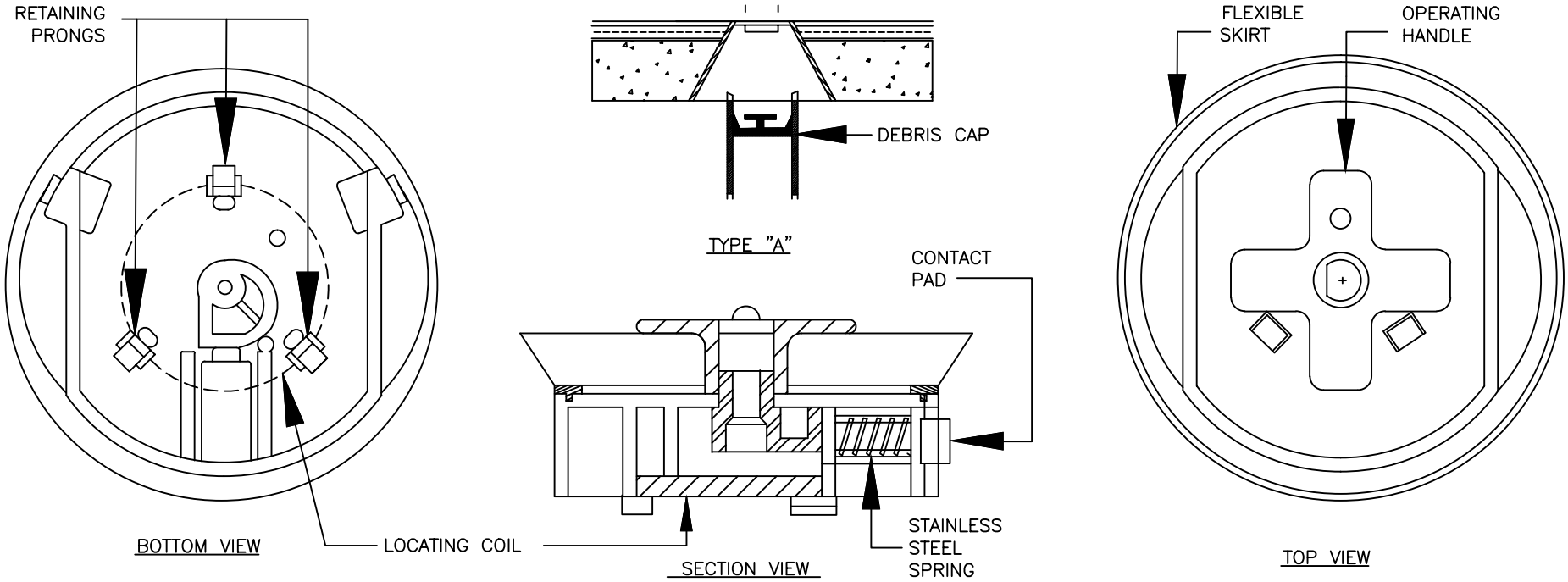

NOTES

1. DEBRIS CAP SHALL BE INSTALLED AS CLOSE UNDER THE CAST IRON COVER WITHOUT INTERFERING WITH COVER OPERATION.
2. FLEXIBLE SKIRT SHALL BE TRIMMED TO PROVIDE A SMOOTH CONTACT WITH THE INTERIOR DIAMETER OF THE PIPE.
3. THE DEBRIS CAP SHALL BE MANUFACTURED BY SW SERVICES, INC., PHOENIX, ARIZONA OR APPROVED EQUAL.
4. THE DEBRIS CAP SHALL BE COMPRISED OF A HOLLOW MEMBER HAVING A CYLINDRICAL OUTER SURFACE, A CLOSURE FOR ONE END AND THREE POINT RESILIENT CONTACT PADS PROJECTING FROM THE OUTER SURFACE. THE CAP SHALL HAVE A FLEXIBLE SKIRT PROVIDING AN OUTWARD SEAL PREVENTING DEBRIS FROM GETTING PAST THE CAP. THE CAP MUST WITHSTAND, WITHOUT SLIPPAGE, A MINIMUM VERTICAL FORCE OF 50 POUNDS, AT A LOADING RATE OF 1.0 IN/MINUTE. THE CAP SHALL BE MOLDED USING GENERAL ELECTRIC ABS #HIM 4500. THE CAP SHALL HAVE RETAINING PRONGS TO RETAIN A STANDARD LOCATING COIL. SCOTCHMARK 4" DISC MARKER 141.7khz BY 3M, OR APPROVED EQUAL.
5. DEBRIS CAPS WITH LOCATOR COILS ARE TO BE INSTALLED ON ANY NEW WATER SERVICES DEPARTMENT CIP PROJECTS, STREET TRANSPORTATION DEPARTMENT CIP PAVING PROJECTS (NEW, REPLACEMENT, AND OVERLAYS) AND PRIVATE DEVELOPMENT PROJECTS IN THE FOLLOWING VALVE BOX LOCATIONS:
   - ALL MAJOR (ARTERIAL) STREETS
   - ANY UNPAVED AREAS
   - ALL EASEMENTS
   - GUTTER LOCATIONS
   - STREETS WITHOUT CURB & GUTTER
   - COUNTY ROADS
   - GATE VALVE LOCATIONS ON WATERLINES GREATER THAN 12" IN DIAMETER
   - ANY OTHER LOCATION INDICATED ON THE PLANS PER THE DESIGNER

DETAIL NO.	City of Phoenix STANDARD DETAIL	DEBRIS CAP INSTALLATION	APPROVED ACTING CITY ENGINEER 7/31/08 DATE	DETAIL NO.
P1165				P1165

NOTES:

1. PROVIDE 2' MIN. OVERLAP OF PLATE ON ASPHALT TO ASSURE NO SLIPPAGE OF PLATE AND NO COLLAPSING OF TRENCH.
2. "POSTED SPEED" DOES NOT INCLUDE TEMPORARY CONSTRUCTION SIGNING.
3. METHOD OF ASPHALT REMOVAL OTHER THAN MILLING AT INSPECTOR'S DISCRETION ONLY.

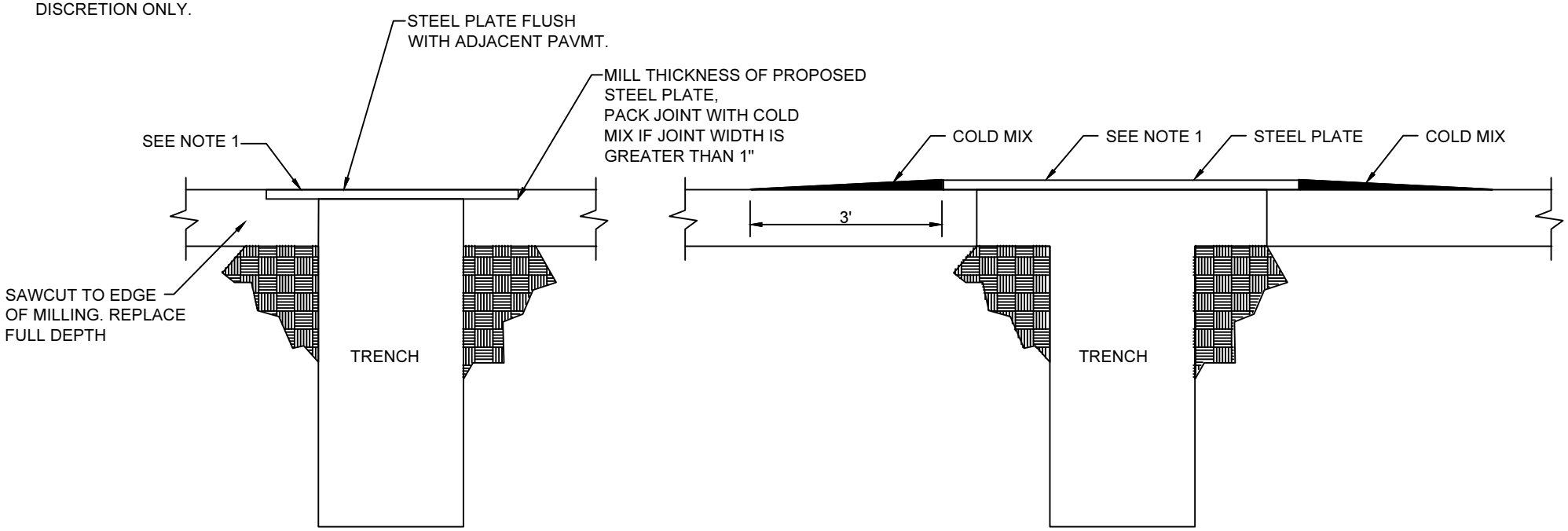

TYPE "A" PLATING
CITY POSTED SPEEDS OF
35 MPH AND GREATER
OR BUS OR TRUCK ROUTE

TYPE "B" PLATING
CITY POSTED SPEEDS
UNDER 35 MPH

IF TRENCH LENGTH IS LESS THAN 5-FEET AND STEEL PLATES WILL BE IN PLACE LESS THAN 48 HOURS, STEEL PLATES MAY BE PLACED DIRECTLY ON EXISTING ASPHALT WITHOUT MILLING. PROVIDE TEMPORARY ASPHALT TRANSITIONS EXTENDING 3-FEET BEYOND EDGE OF STEEL PLATES.

DETAIL NO.	City of Phoenix STANDARD DETAIL	TRENCHING STEEL PLATE	APPROVED Mario Saldamando CITY ENGINEER 7/9/92 DATE	DETAIL NO.
P1170				P1170

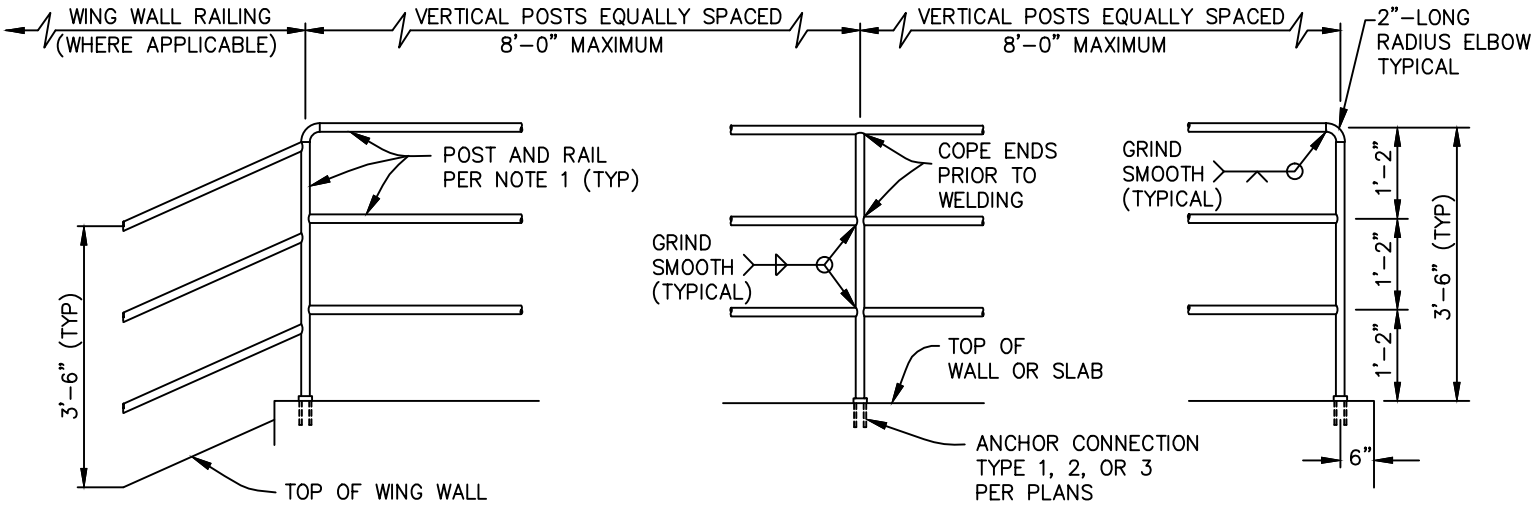

ELEVATION

CONSTRUCTION NOTES

1. PIPE 2 STD (ASTM A53 GRADE B) GALVANIZED PER SECTION 771.
2. PAINT PER SECTION 530 WHERE REQUIRED BY ORDINANCE OR PLANS. COLOR PER PLANS.
3. VERTICAL POSTS TO BE EVENLY SPACED.
4. SAFETY RAILING TO BE PLACED ON ALL HEADWALLS AND AT THE BACK OF SCUPPERS.
5. ANCHORAGE AT SCUPPERS SHALL BE PER MAG STD DETAIL 206-2.
6. EXPANSION JOINT SPACING SHALL NOT EXCEED 40FT AND SHALL BE LOCATED AT STRUCTURE EXPANSION JOINTS, WHICHEVER IS LESS.

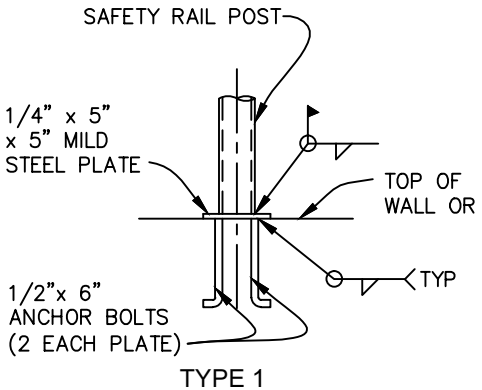

TYPE 1

ANCHOR PLATE DETAIL

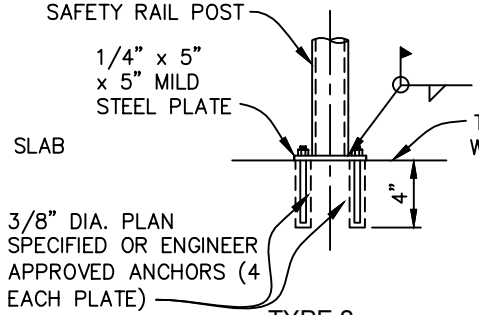

TYPE 2

BOLT DETAIL

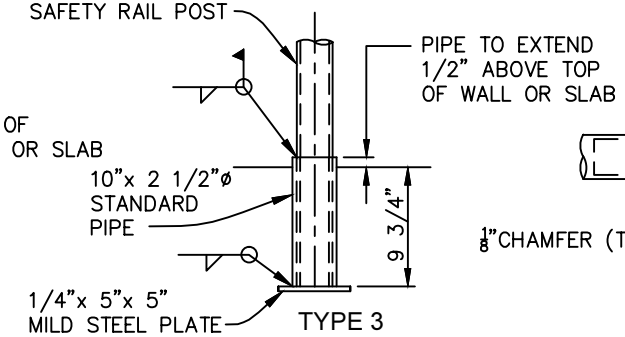

TYPE 3

PIPE SLEEVE DETAIL

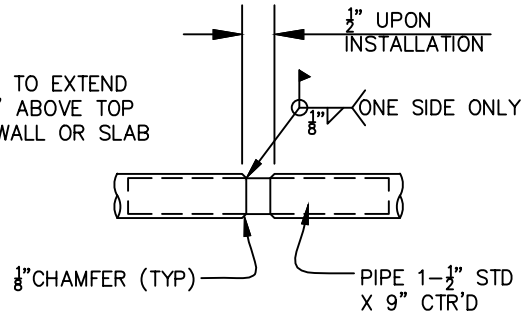

EXPANSION JOINT

NOTES:

1. FOR GROUND INSTALLATION REFER TO MAG STD DETAIL 145.
2. NOT TO BE USED AS A PEDESTRIAN BRIDGE RAIL.

DETAIL NO.	City of Phoenix STANDARD DETAIL	SAFETY RAILING DETAIL	APPROVED CITY ENGINEER 12/10/2012 DATE	DETAIL NO.
P1173				P1173

CONDITIONS WHERE SAFETY RAILINGS (DETAIL P1173) ARE REQUIRED

(REFER TO SAFETY RAILING MAG DETAIL 145, TYPE 4 FOR ATTACHMENT TO THE GROUND)

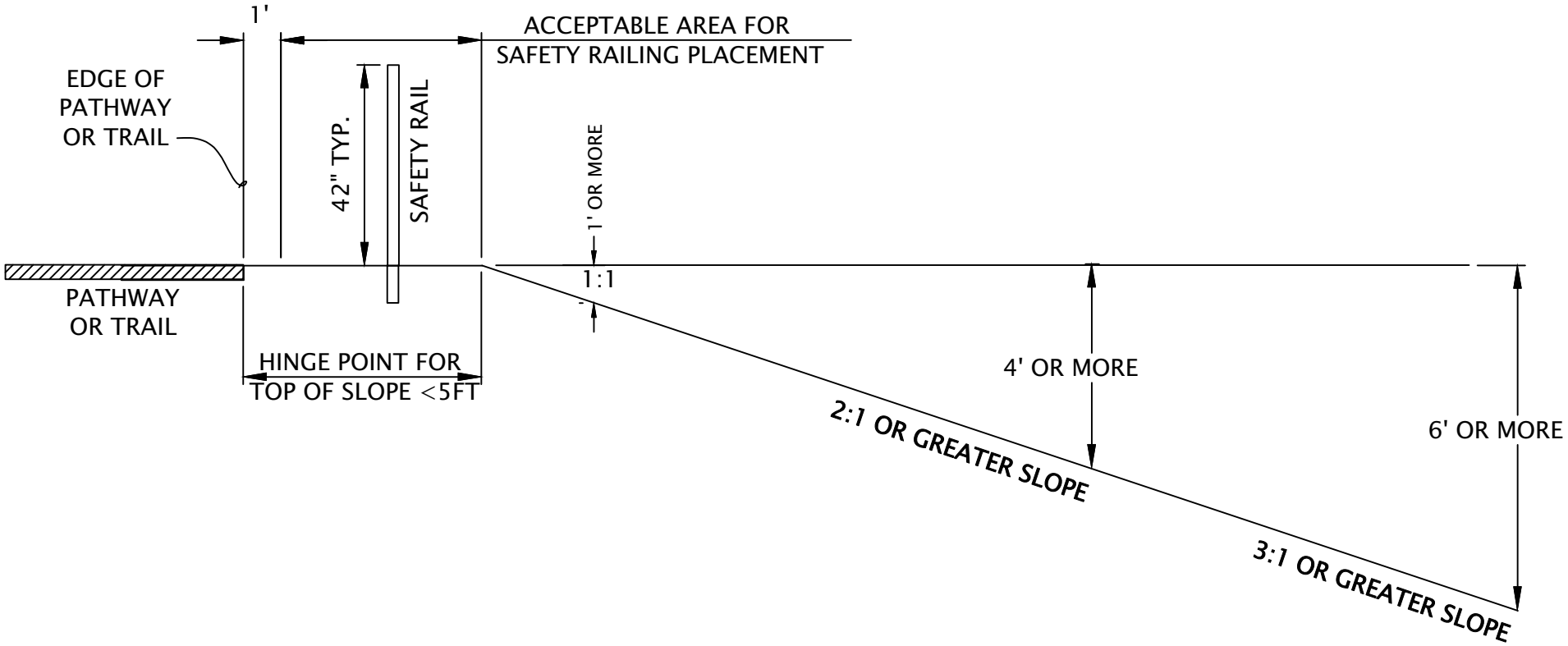

NOTE:
1) SAFETY RAILS ARE REQUIRED WHERE THE CONDITIONS WILL EXCEED THE ABOVE DEPICTED LIMITS

NOT TO SCALE

DETAIL NO.	City of Phoenix STANDARD DETAIL	CONDITIONS WHERE SAFETY RAILINGS ARE REQUIRED	APPROVED CITY ENGINEER 12/10/2012 DATE	DETAIL NO.
P1174				P1174

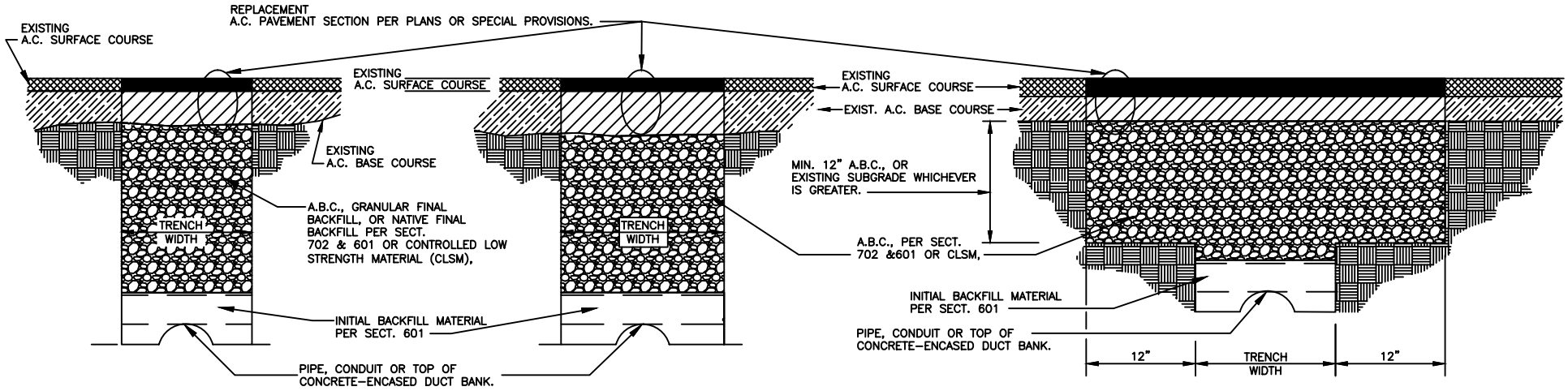

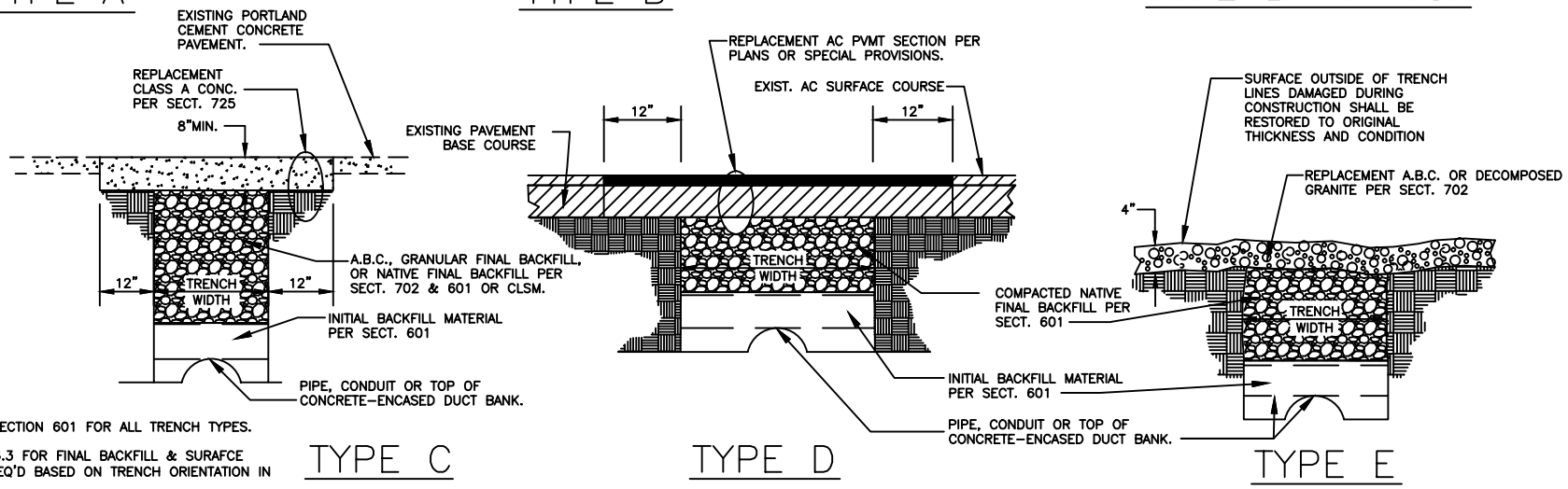

NOTES:

1. INITIAL BACKFILL PER SECTION 601 FOR ALL TRENCH TYPES.
2. REFER TO SECTION 336.3 FOR FINAL BACKFILL & SURAFCE REPLACEMENT TYPES REQ'D BASED ON TRENCH ORIENTATION IN STREETS.
3. TRENCH WIDTH PER SECTION 336 & 601.
4. EXPOSED WATER SERVICE PIPES THAT CROSS TRENCHES TO BE BACKFILLED WITH CLSM SHALL BE WRAPPED WITH MIN. 3/4" THICK CLOSED CELL FOAM INSULATION PRIOR TO PLACEMENT OF CLSM.
5. FOR TRENCHES UP TO 24" WIDE, CLSM MAY BE USED UP TO THE REPLACEMENT PAVEMENT SUBGRADE LEVEL. FOR TRENCHES BETWEEN 24" AND 6' WIDE, CLSM SHALL ONLY BE PLACED IN THE TOP 24" OF TRENCH. FOR TRENCHES WIDER THAN 6', CLSM FINAL BACKFILL SHALL NOT BE USED, UNLESS APPROVED BY THE ENGINEER.

DETAIL NO.	City of Phoenix STANDARD DETAIL	TRENCH BACKFILL & SURFACE REPLACEMENT	APPROVED CITY ENGINEER 07/01/2015 DATE	DETAIL NO.
P1200				P1200

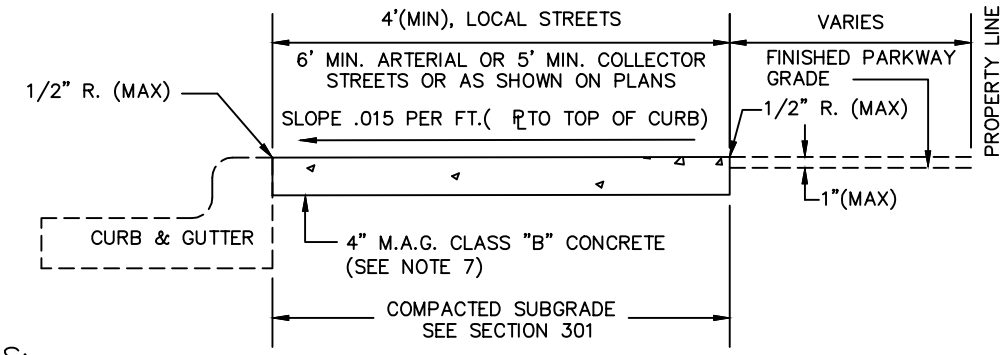

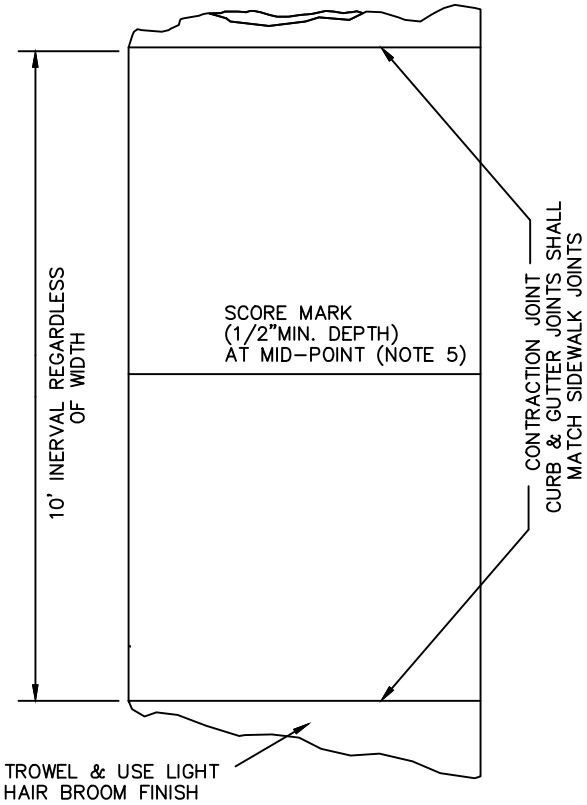

NOTES:

1. SIDEWALK CONSTRUCTION SHALL CONFORM TO SECTION 340.
2. EXPANSION JOINT FILLER SHALL BE 1/2" BITUMINOUS TYPE PREFORMED EXPANSION JOINT FILLER, A.S.T.M. D-1751.
3. EXPANSION JOINTS SHALL BE INSTALLED PRIOR TO ALL POURS, AT POINTS OF CURVATURE, AT ADJOINING STRUCTURES, AT DRIVEWAYS AND AT A MAXIMUM SPACING OF 50'. THE EXPANSION JOINT MUST PROVIDE FOR COMPLETE SEPARATION OF THE SIDEWALK FROM ADJOINING CONCRETE.
4. THE EXPANSION JOINT MATERIAL SHALL EXTEND FROM 1/4" BELOW THE TOP SURFACE OF THE SIDEWALK TO 1" INTO THE SUBGRADE.
5. WHEN SIDEWALK AND ADJACENT CURB ARE INSTALLED MONOLITHICALLY, THE MID-POINT SCORE LINE MUST EXTEND ACROSS THE CURB & GUTTER.
6. EXCEPTION TO BE APPROVED BY CITY ENGINEER.
7. CONCRETE SHALL BE M.A.G. CLASS "A" IN AREAS WITH CROSSING VEHICULAR TRAFFIC.

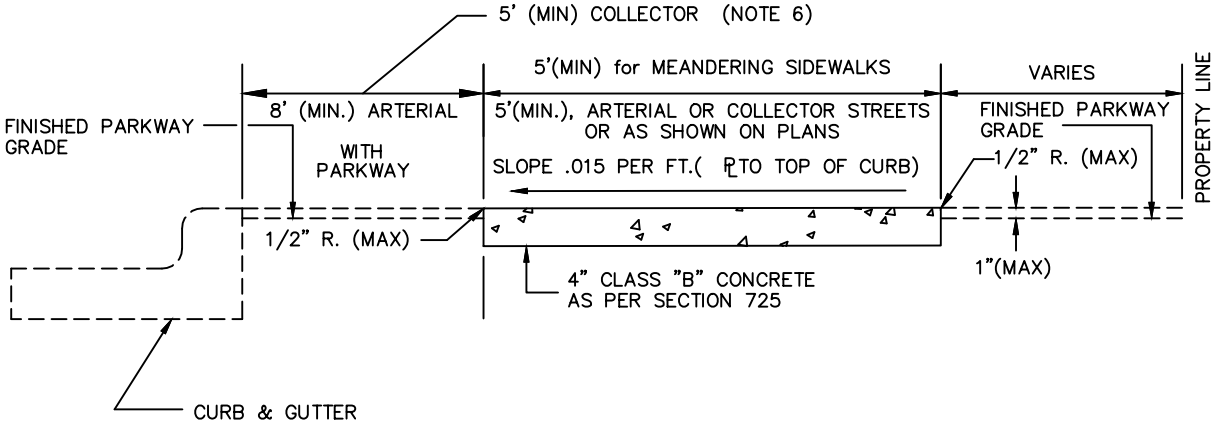

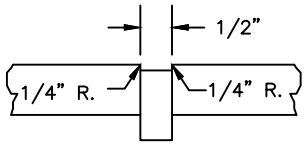

EXPANSION JOINT

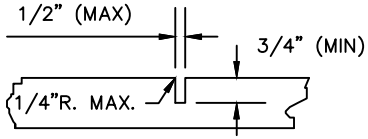

CONTRACTION JOINT

DETAIL NO.	City of Phoenix STANDARD DETAIL	SIDEWALKS	APPROVED CITY ENGINEER 07/01/2015 DATE	DETAIL NO.
P1230				P1230

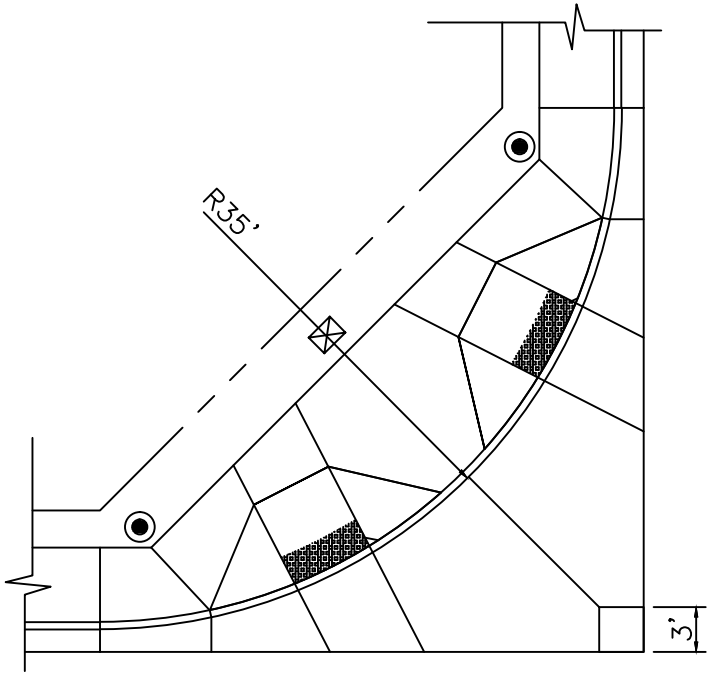

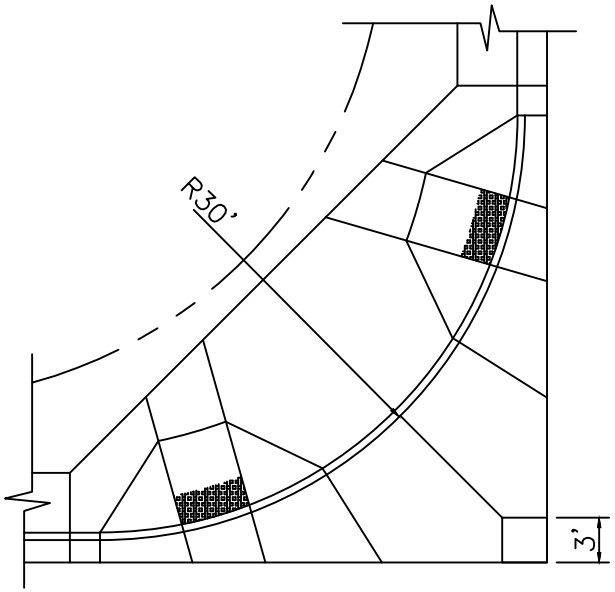

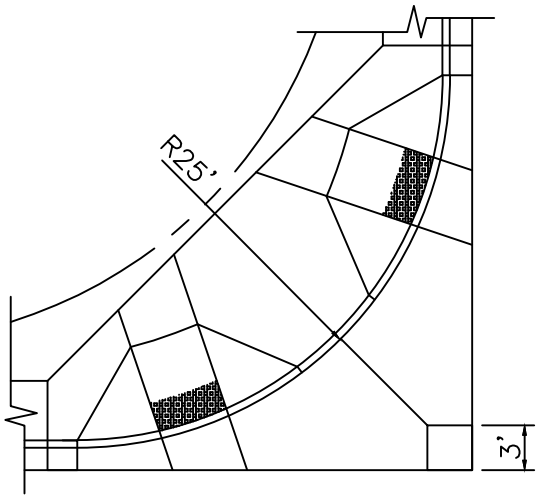

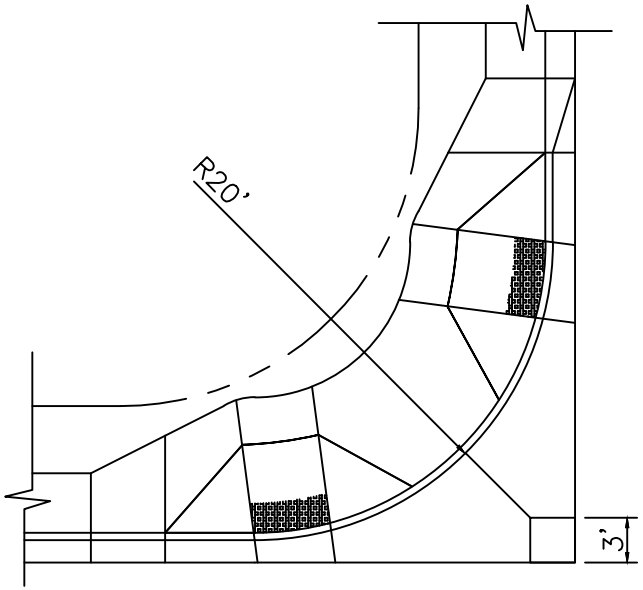

NOTES:

1. CONSTRUCT THE CONTRACTION JOINTS AS SHOWN ON CONCRETE APRON FOR THE RADIUS REQUIRED.
2. WHEN PLANS CALL FOR A CLASS "A" CONCRETE VALLEY GUTTER THE CONTRACTION JOINTS SHALL BE SPACED SYMMETRICAL WITH AT LEAST ONE JOINT EVERY 10 FEET.
3. WHEN PLANS CALL FOR A 7' VALLEY GUTTER, MAKE A 7' SQUARE INSTEAD OF A 3' SQUARE.

DETAIL NO.	City of Phoenix STANDARD DETAIL	APRON JOINTS	APPROVED CITY ENGINEER 07/01/2015 DATE	DETAIL NO.
P1231				P1231

NOTES:

1. CONSTRUCTION DETAILS FOR ALL SIDEWALK RAMPS ARE PRESENTED IN DETAILS P1233 THROUGH P1241-3.
2. DETECTABLE WARNING STRIP:
   - 2.1 SHALL BE OF CONCRETE, CONCRETE POLYMER OR APPROVED EQUIVALENT.
   - 2.2 SHALL HAVE A 5/8" MINIMUM THICKNESS.
   - 2.3 SHALL BE 8000 PSI MINIMUM RATED.
   - 2.4 SHALL NOT BE CONSTRUCTED OF ASPHALT PAVEMENT, BRICK PAVERS, STAMPED CONCRETE, OR ANY TYPE OF GLUE-DOWN MATERIAL.
   - 2.5 DOME AREA SHALL BE OF A CONTRASTING COLOR FROM THE SURROUNDING WALKING AREAS. FOR EXAMPLE, DARK ON LIGHT OR LIGHT ON DARK (MINIMUM OF 70% CONTRAST).

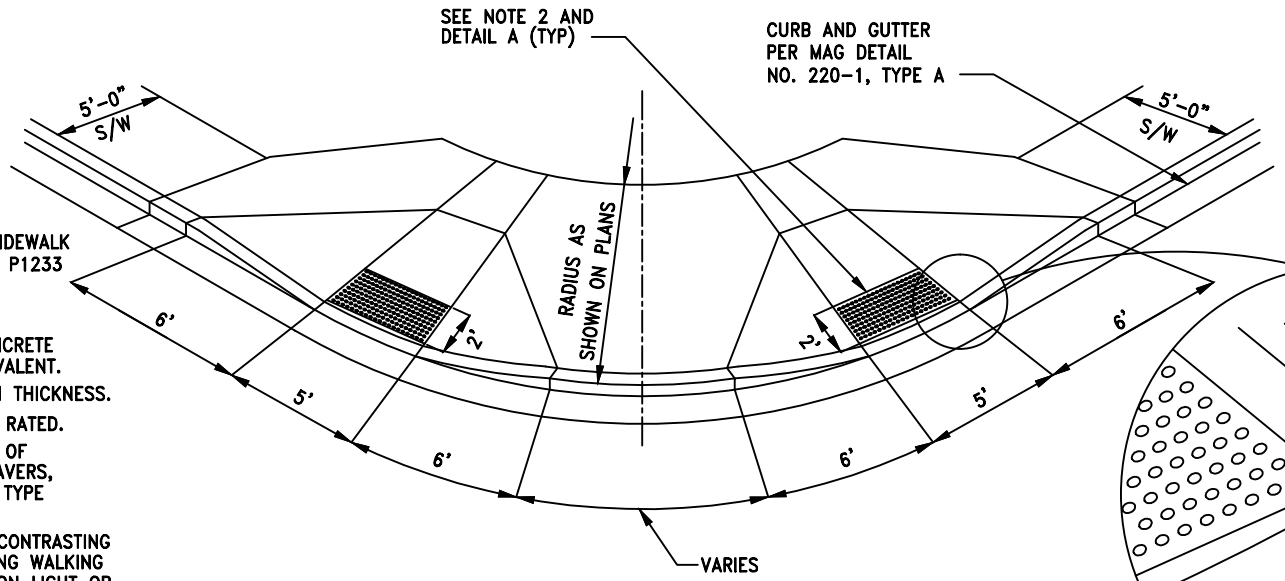

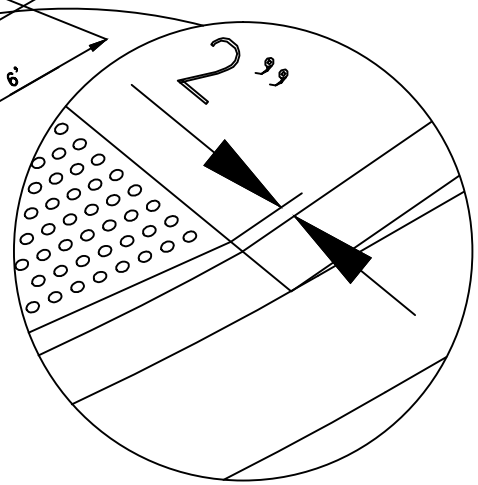

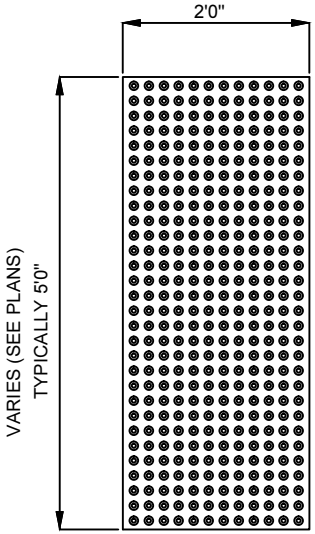

DETECTABLE WARNING STRIP

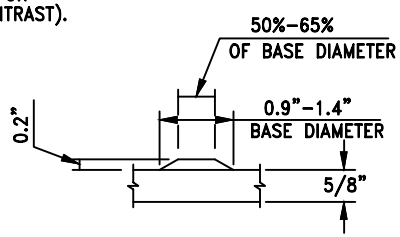

TRUNCATED DOME ELEVATION

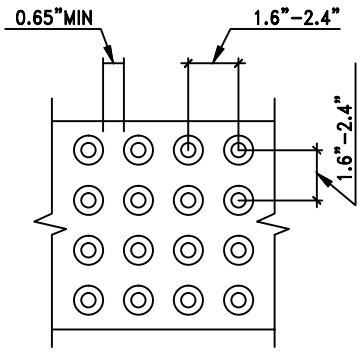

TEXTURE PATTERN DETAIL

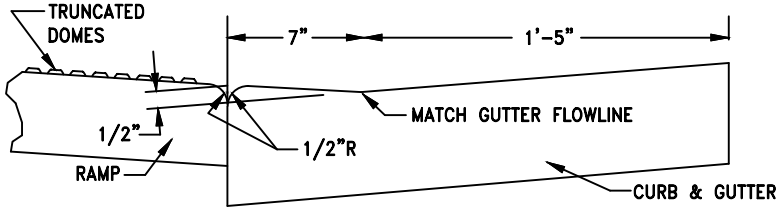

DETAIL A (NTS)

ICC / ANSI A117.1-2003
705.5 TRUNCATED DOMES

DETECTABLE WARNING SURFACES SHALL HAVE TRUNCATED DOMES COMPLYING WITH SECTION 705.5 OF THE ICC/ANSI A117.1-2003, PROVIDED BELOW.

705.5.1 SIZE. TRUNCATED DOMES SHALL HAVE A BASE DIAMETER OF 0.9 INCH (23mm) MINIMUM TO 1.4 INCH (36mm) MAXIMUM, AND A TOP DIAMETER OF 50 PERCENT MINIMUM TO 65 PERCENT MAXIMUM OF THE BASE DIAMETER.

705.5.2 HEIGHT. TRUNCATED DOMES SHALL HAVE A HEIGHT OF 0.2 INCH (5.1mm).

705.5.3 SPACING. TRUNCATED DOMES SHALL HAVE A CENTER-TO-CENTER SPACING OF 1.6 INCHES (41mm) MINIMUM TO 2.4 INCHES (61mm) MAXIMUM, AND A BASE-TO-BASE SPACING OF 0.65 INCH (16.5mm) MINIMUM, MEASURED BETWEEN THE MOST ADJACENT DOMES ON THE GRID.

705.5.4 ALIGNMENT. TRUNCATED DOMES SHALL BE ALIGNED IN A SQUARE GRID PATTERN.

DETAIL NO.	City of Phoenix STANDARD DETAIL	TRUNCATED DOMES DETAIL	APPROVED CITY ENGINEER 07/01/2015 DATE	DETAIL NO.
P1232				P1232

DIMENSION TABLE		
A(ft)	B(ft)	C(ft)
25	0	5
30	4	5
35	8	15

NOTE: B IS THE DISTANCE FROM THE PT OR PC TO THE EDGE OF RAMP WING.

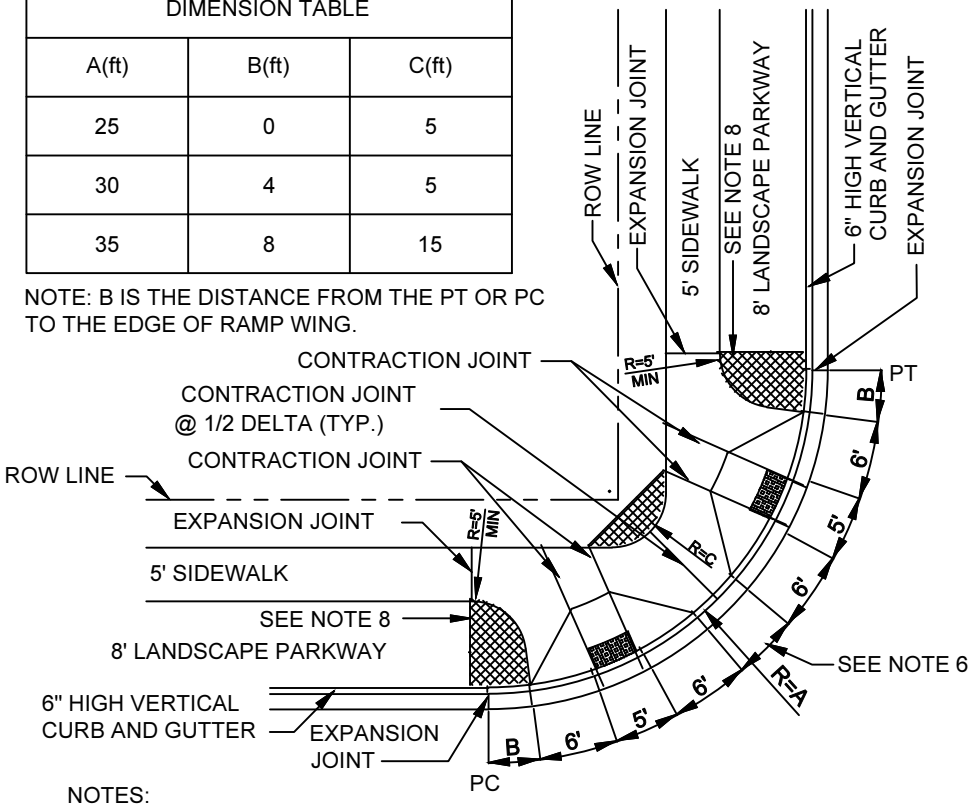

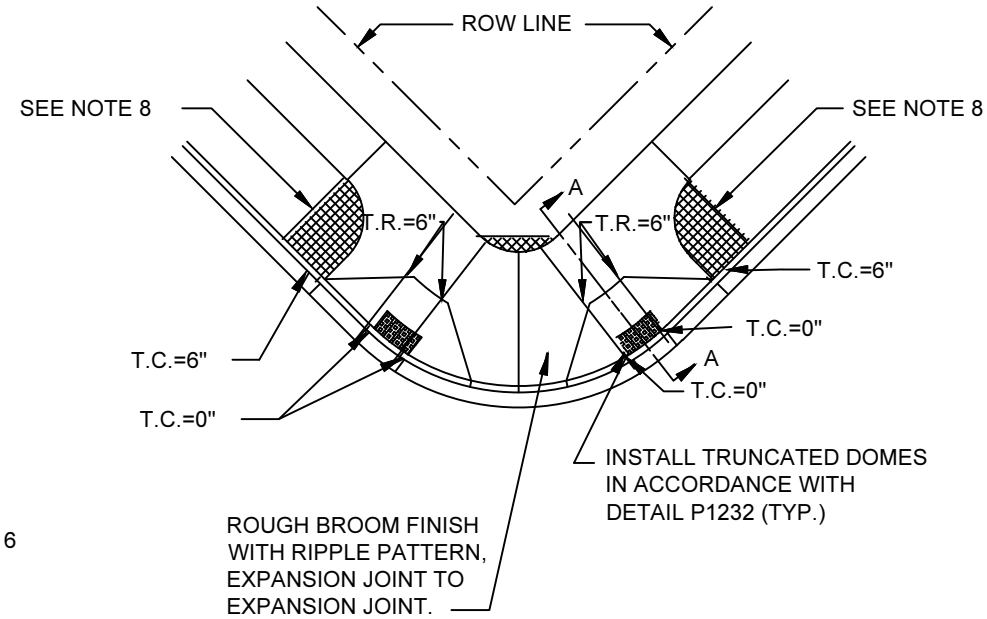

NOTES:

1. CONTROL ELEVATIONS ARE SHOWN IN RELATION TO THE GUTTER AND ARE LOCATED RADIALLY. GUTTER ELEVATION=0".
2. CONCRETE CURB AND GUTTER AT CURB RETURNS WITH RAMPS SHALL BE M.A.G. CLASS A. CONCRETE SIDEWALKS AND RAMPS AT CURB RETURNS SHALL BE M.A.G. CLASS A.
3. RAMP CURBS MAY BE POURED MONOLITHIC WITH A CONTRACTION JOINT.
4. EXPANSION JOINT FILLER SHALL BE 1/2" BITUMINOUS TYPE PREFORMED EXPANSION JOINT FILLER A.S.T.M. D-1751
5. 9" THICK LANDING, RAMPS, AND CURBS FROM EXPANSION JOINT TO EXPANSION JOINT ON MAJOR OR COLLECTOR STREETS. 4" THICK LANDING AND RAMPS ON LOCAL STREETS.
6. REDUCE CURB HEIGHT BY 1" MAXIMUM IN ORDER TO ACCOMMODATE A 12" SEPARATION BETWEEN RAMPS.
7. MAINTAIN THE PLANE OF THE LANDING ONE FOOT (1ft.) BEYOND THE TOP OF LANDING.
8. ADDITIONAL SIDEWALK PER NOTE 2 & 5 WHEN SIGNAL POLES ARE LOCATED IN THESE AREAS.

SECTION A-A (TYP.)

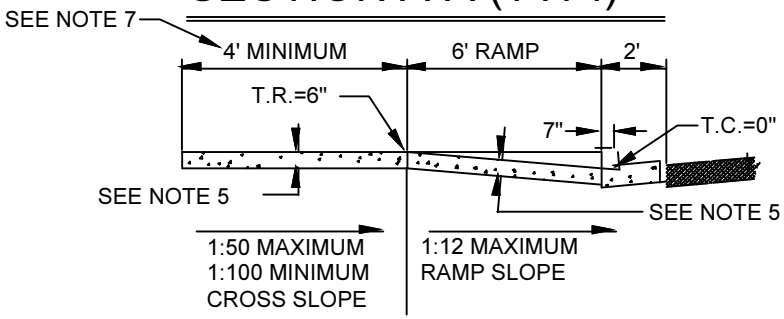

DETAIL NO.	City of Phoenix STANDARD DETAIL	CURB RAMP DETAIL – 25', 30', & 35' RADII 8' LANDSCAPE PLANTERS, BOTH LEGS	APPROVED CITY ENGINEER 07/01/2015 DATE	DETAIL NO.
P1233				P1233

DIMENSION TABLE		
A(ft)	B(ft)	C(ft)
25	0	15
30	4	20
35	8	25

NOTE: B IS THE DISTANCE FROM THE PT OR PC TO THE EDGE OF RAMP WING.

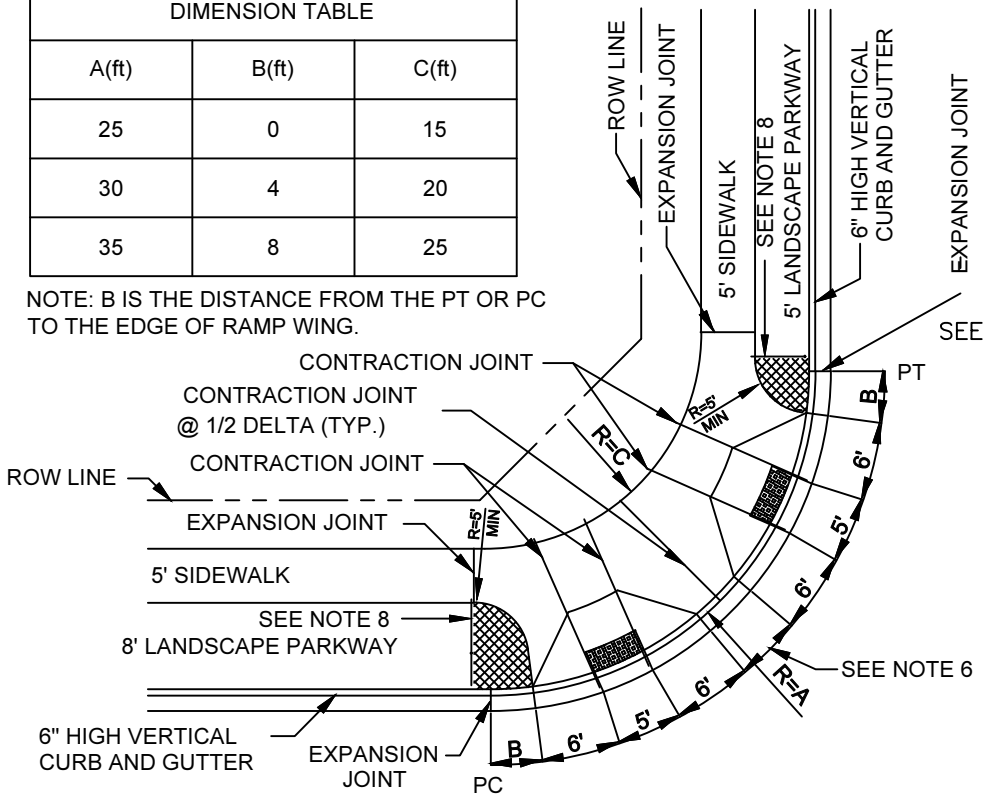

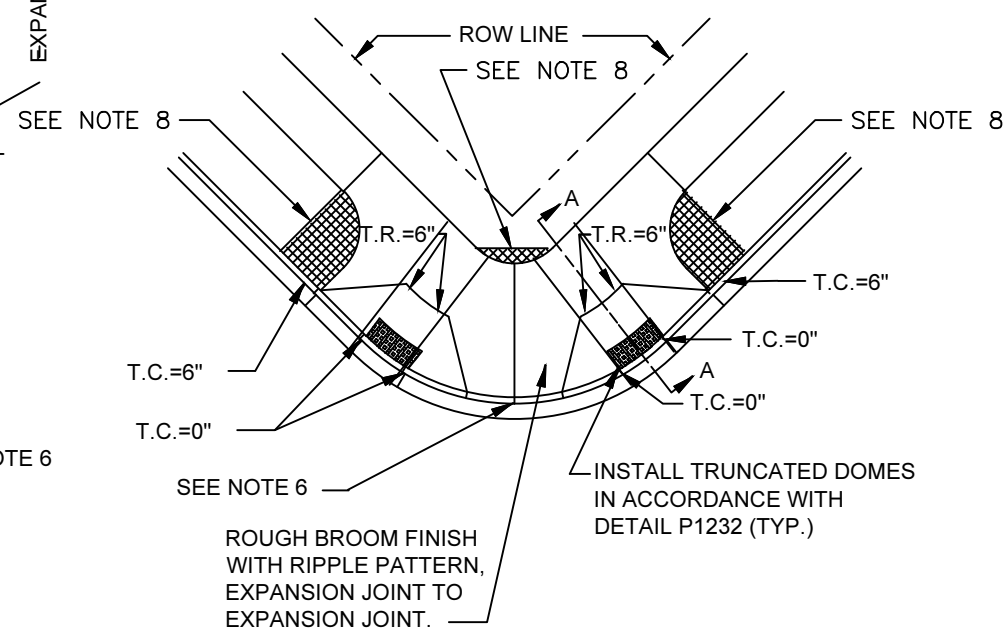

NOTES:

1. CONTROL ELEVATIONS ARE SHOWN IN RELATION TO THE GUTTER AND ARE LOCATED RADIALLY. GUTTER ELEVATION=0".
2. CONCRETE CURB AND GUTTER AT CURB RETURNS WITH RAMPS SHALL BE M.A.G. CLASS A. CONCRETE SIDEWALKS AND RAMPS AT CURB RETURNS SHALL BE M.A.G. CLASS A.
3. RAMP CURBS MAY BE POURED MONOLITHIC WITH A CONTRACTION JOINT.
4. EXPANSION JOINT FILLER SHALL BE 1/2" BITUMINOUS TYPE PREFORMED EXPANSION JOINT FILLER A.S.T.M. D-1751
5. 9" THICK LANDING, RAMPS, AND CURBS FROM EXPANSION JOINT TO EXPANSION JOINT ON MAJOR OR COLLECTOR STREETS. 4" THICK LANDING AND RAMPS ON LOCAL STREETS.
6. REDUCE CURB HEIGHT BY 1" MAXIMUM IN ORDER TO ACCOMMODATE A 12" SEPARATION BETWEEN RAMPS.
7. MAINTAIN THE PLANE OF THE LANDING ONE FOOT (1ft.) BEYOND THE TOP OF LANDING.
8. ADDITIONAL SIDEWALK PER NOTE 2 & 5 WHEN SIGNAL POLES ARE LOCATED IN THESE AREAS.

SECTION A-A (TYP.)

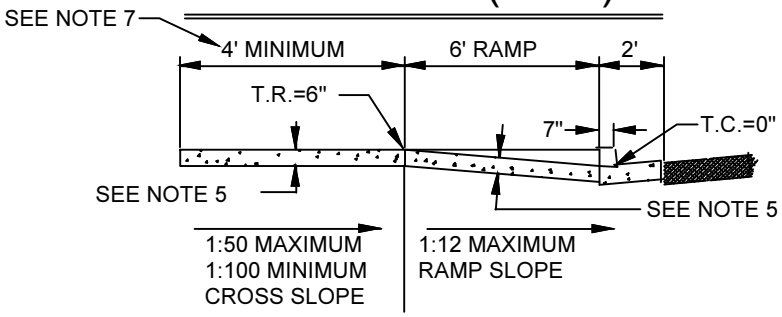

DETAIL NO.	City of Phoenix STANDARD DETAIL	CURB RAMP DETAIL – 25', 30', & 35' RADII 8' & 5' LANDSCAPE PLANTERS	APPROVED CITY ENGINEER 07/01/2015 DATE	DETAIL NO.
P1234				P1234

DIMENSION TABLE	
A(ft)	B(ft)
25	0
30	4
35	8

NOTE: B IS THE DISTANCE FROM THE PT OR PC TO THE EDGE OF RAMP WING.

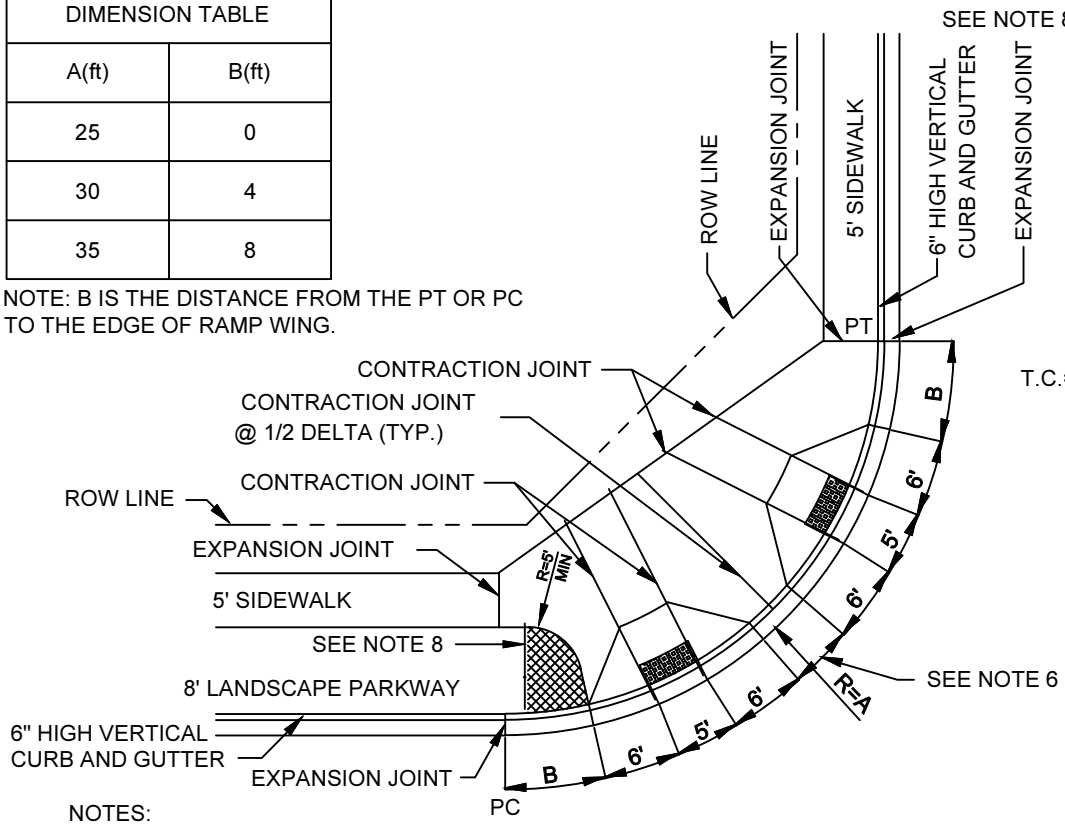

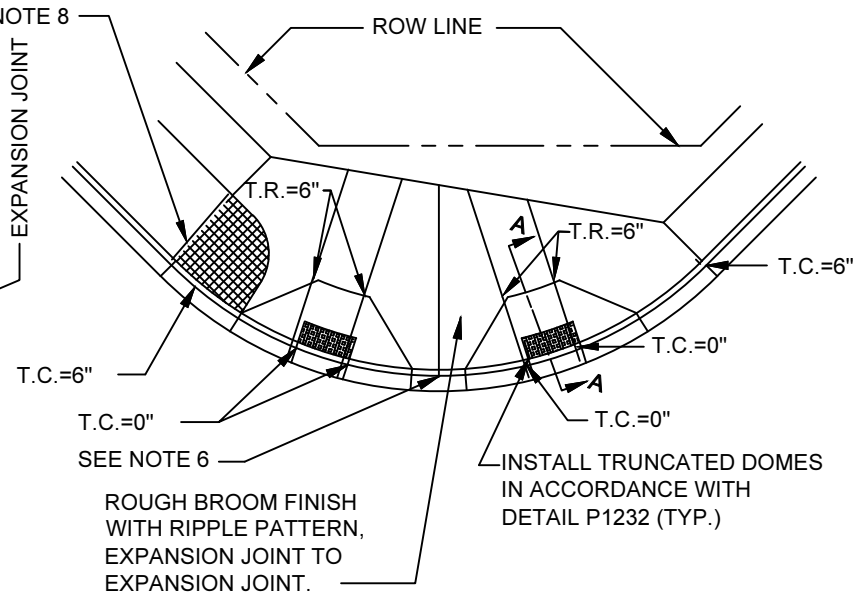

SECTION A-A (TYP.)

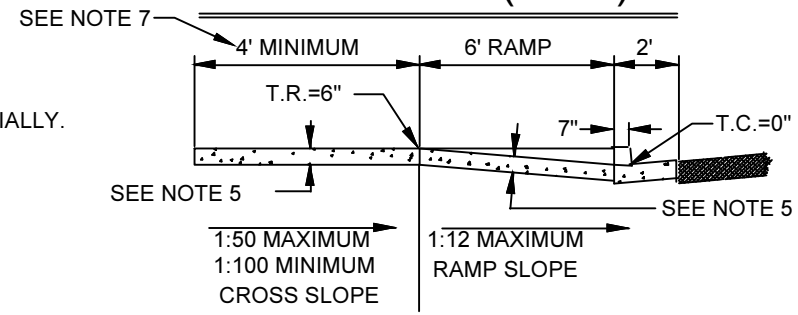

NOTES:

1. CONTROL ELEVATIONS ARE SHOWN IN RELATION TO THE GUTTER AND ARE LOCATED RADIALLY. GUTTER ELEVATION=0".
2. CONCRETE CURB AND GUTTER AT CURB RETURNS WITH RAMPS SHALL BE M.A.G. CLASS A. CONCRETE SIDEWALKS AND RAMPS AT CURB RETURNS SHALL BE M.A.G. CLASS A.
3. RAMP CURBS MAY BE POURED MONOLITHIC WITH A CONTRACTION JOINT.
4. EXPANSION JOINT FILLER SHALL BE 1/2" BITUMINOUS TYPE PREFORMED EXPANSION JOINT FILLER A.S.T.M. D-1751
5. 9" THICK LANDING, RAMPS, AND CURBS FROM EXPANSION JOINT TO EXPANSION JOINT ON MAJOR OR COLLECTOR STREETS. 4" THICK LANDING AND RAMPS ON LOCAL STREETS.
6. REDUCE CURB HEIGHT BY 1" MAXIMUM IN ORDER TO ACCOMMODATE A 12" SEPARATION BETWEEN RAMPS.
7. MAINTAIN THE PLANE OF THE LANDING ONE FOOT (1ft.) BEYOND THE TOP OF LANDING.
8. ADDITIONAL SIDEWALK PER NOTE 2 & 5 WHEN SIGNAL POLES ARE LOCATED IN THESE AREAS.

DETAIL NO.	City of Phoenix STANDARD DETAIL	CURB RAMP DETAIL – 25', 30', & 35' RADII 8' LANDSCAPE PLANTER, ONE SIDE	APPROVED CITY ENGINEER 07/01/2015 DATE	DETAIL NO.
P1235				P1235

DIMENSION TABLE		
A(ft)	B(ft)	C(ft)
25	2	*
30	4	20
35	8	24

* RAMP IS STRAIGHT ACROSS THE BACK.
NOTE: B IS THE DISTANCE FROM THE PT OR PC TO THE EDGE OF RAMP WING.

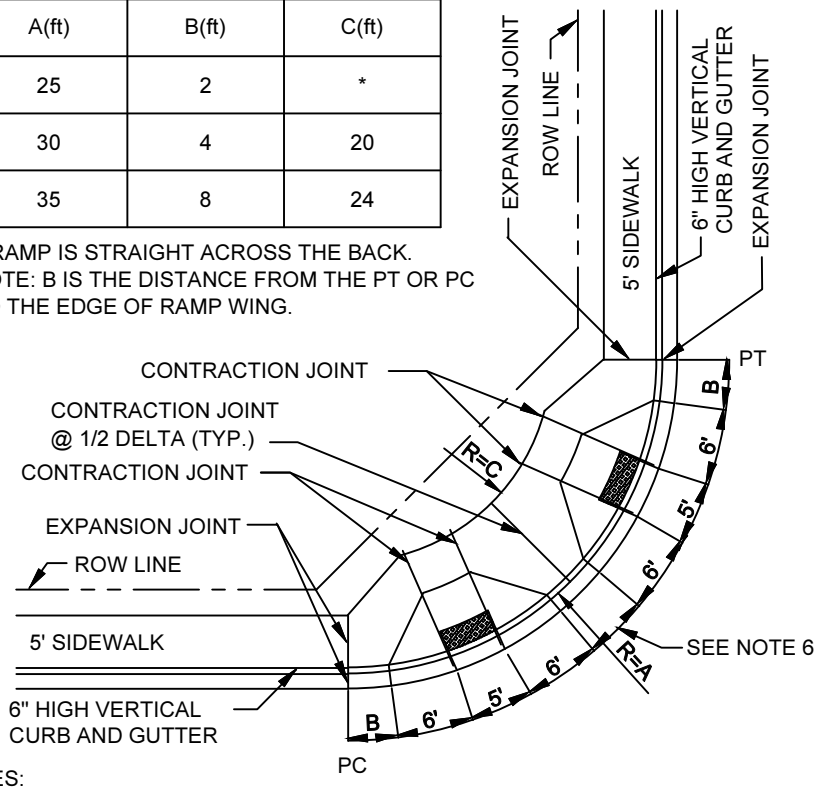

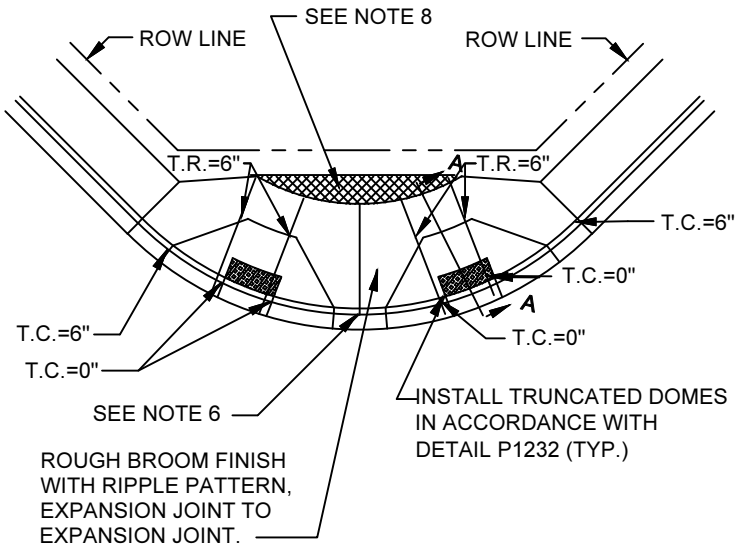

SECTION A-A (TYP.)

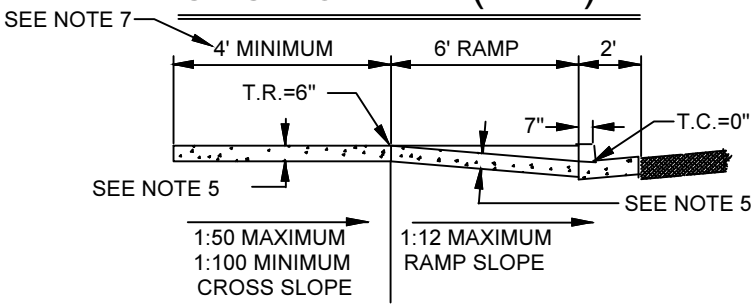

NOTES:

1. CONTROL ELEVATIONS ARE SHOWN IN RELATION TO THE GUTTER AND ARE LOCATED RADIALLY. GUTTER ELEVATION=0".
2. CONCRETE CURB AND GUTTER AT CURB RETURNS WITH RAMPS SHALL BE M.A.G. CLASS A. CONCRETE SIDEWALKS AND RAMPS AT CURB RETURNS SHALL BE M.A.G. CLASS A.
3. RAMP CURBS MAY BE POURED MONOLITHIC WITH A CONTRACTION JOINT.
4. EXPANSION JOINT FILLER SHALL BE 1/2" BITUMINOUS TYPE PREFORMED EXPANSION JOINT FILLER A.S.T.M. D-1751
5. 9" THICK LANDING, RAMPS, AND CURBS FROM EXPANSION JOINT TO EXPANSION JOINT ON MAJOR OR COLLECTOR STREETS. 4" THICK LANDING AND RAMPS ON LOCAL STREETS.
6. REDUCE CURB HEIGHT BY 1" MAXIMUM IN ORDER TO ACCOMMODATE A 12" SEPARATION BETWEEN RAMPS.
7. MAINTAIN THE PLANE OF THE LANDING ONE FOOT (1ft.) BEYOND THE TOP OF LANDING.
8. ADDITIONAL SIDEWALK PER NOTE 2 & 5 WHEN SIGNAL POLES ARE LOCATED IN THESE AREAS.

DETAIL NO.	City of Phoenix STANDARD DETAIL	CURB RAMP DETAIL – 25', 30', & 35' RADII NO LANDSCAPE PLANTERS	APPROVED CITY ENGINEER 07/01/2015 DATE	DETAIL NO.
P1236				P1236

RADII TABLE	
A(ft)	B(ft)
20	12
25	17
30	22.5

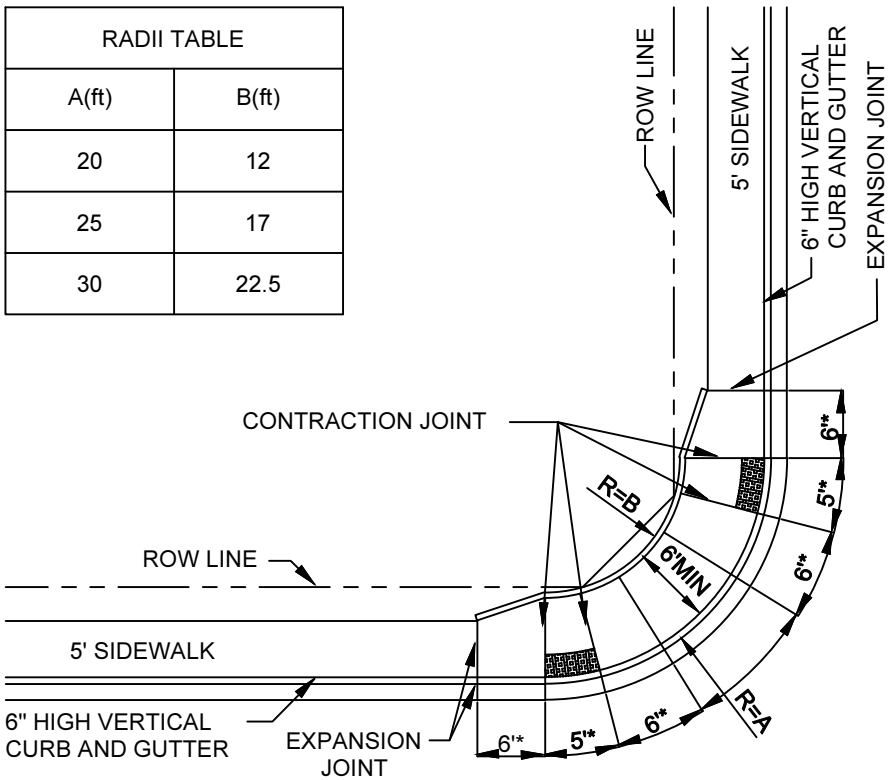

* MINIMUM WIDTH

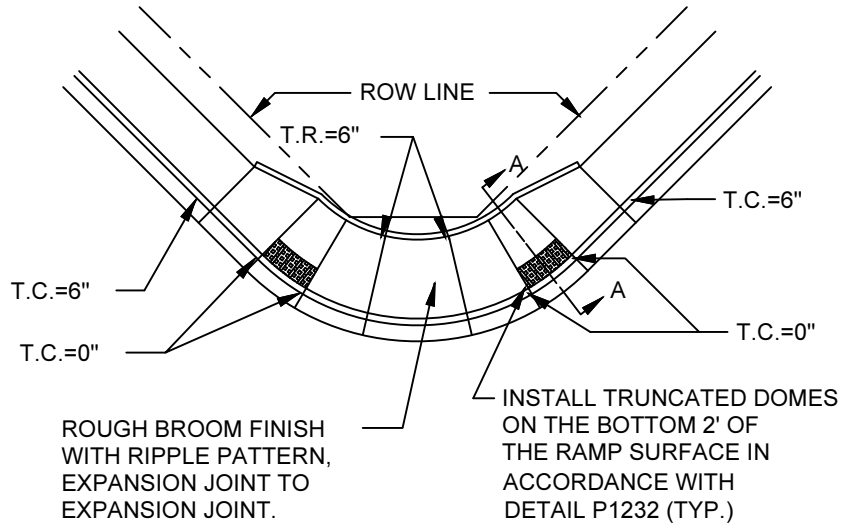

SECTION A-A (TYP.)

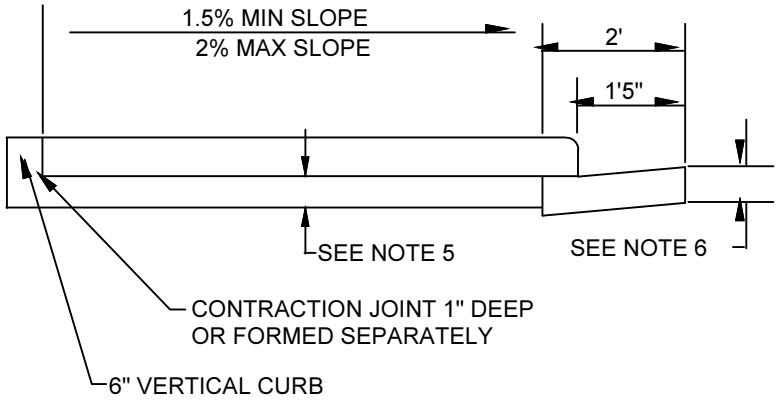

NOTES:

1. CONTROL ELEVATIONS ARE SHOWN IN RELATION TO THE GUTTER AND ARE LOCATED RADIALLY. GUTTER ELEVATION=0".
2. CONCRETE CURB AND GUTTER AT CURB RETURNS WITH RAMPS SHALL BE M.A.G. CLASS A. CONCRETE SIDEWALKS AND RAMPS AT CURB RETURNS SHALL BE M.A.G. CLASS A.
3. RAMP CURBS MAY BE POURED MONOLITHIC WITH A CONTRACTION JOINT.
4. EXPANSION JOINT FILLER SHALL BE 1/2" BITUMINOUS TYPE PREFORMED EXPANSION JOINT FILLER A.S.T.M. D-1751
5. 9" THICK LANDING, RAMPS, AND CURBS FROM EXPANSION JOINT TO EXPANSION JOINT ON MAJOR OR COLLECTOR STREETS. 4" THICK LANDING AND RAMPS ON LOCAL STREETS.
6. 9" CURB ON MAJOR AND COLLECTOR STREETS AND 6" CURB ON LOCAL STREETS.

DETAIL NO.	City of Phoenix STANDARD DETAIL	CURB RAMP DETAIL – ALL RADIUS CURB RETURNS, LIMITED RIGHT OF WAY	APPROVED ACTING CITY ENGINEER 7/31/08 DATE	DETAIL NO.
P1237				P1237

DIMENSION TABLE		
A(ft)	B(ft)	C(ft)
8	8	5
8	5	10

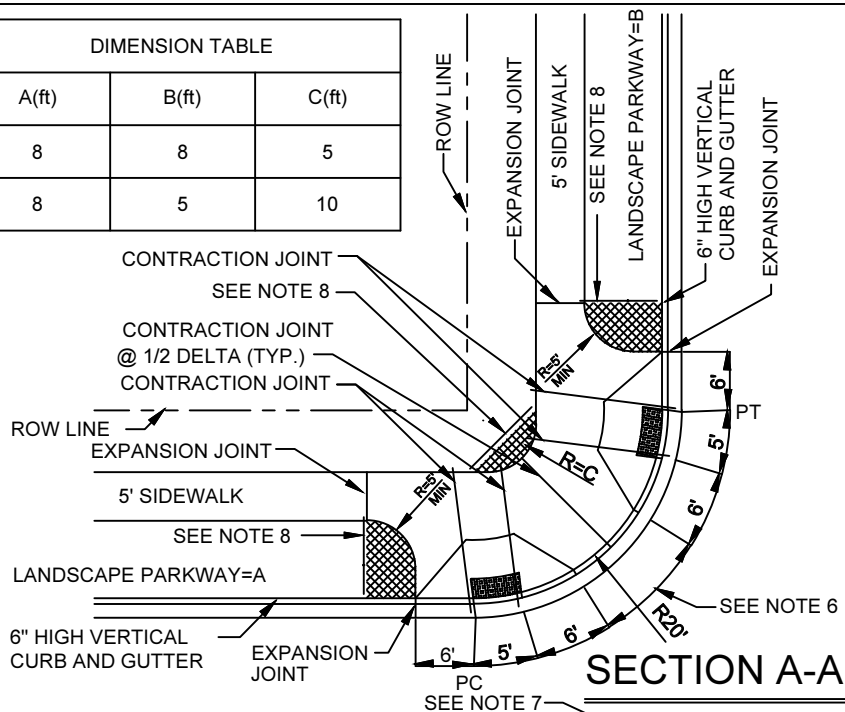

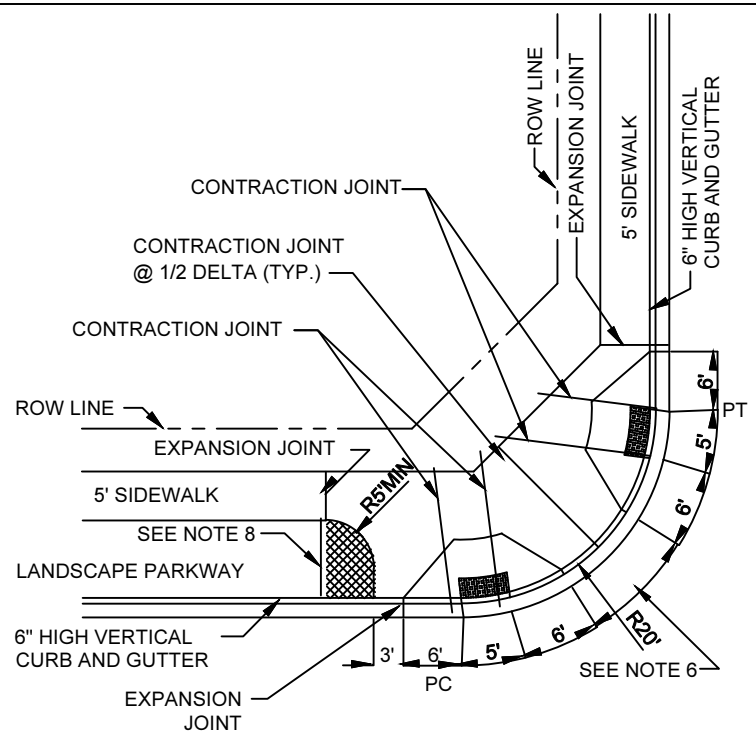

SECTION A-A (TYP.)

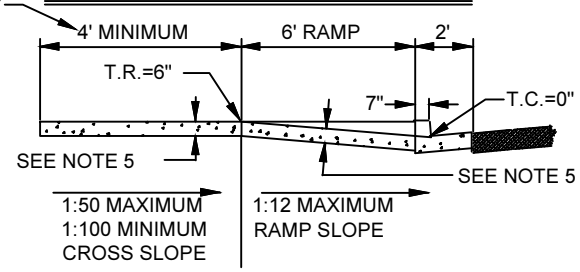

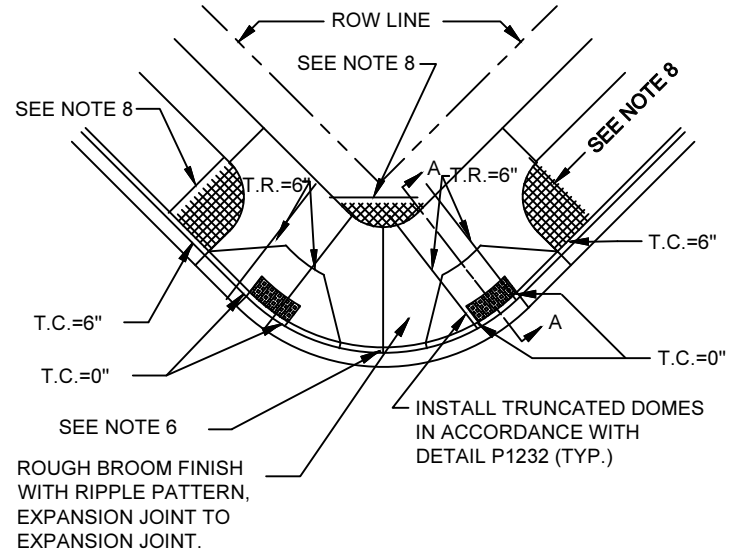

NOTES:

1. CONTROL ELEVATIONS ARE SHOWN IN RELATION TO THE GUTTER AND ARE LOCATED RADIALLY. GUTTER ELEVATION=0".
2. CONCRETE CURB AND GUTTER AT CURB RETURNS WITH RAMPS SHALL BE M.A.G. CLASS A. CONCRETE SIDEWALKS AND RAMPS AT CURB RETURNS SHALL BE M.A.G. CLASS A.
3. RAMP CURBS MAY BE POURED MONOLITHIC WITH A CONTRACTION JOINT.
4. EXPANSION JOINT FILLER SHALL BE 1/2" BITUMINOUS TYPE PREFORMED EXPANSION JOINT FILLER A.S.T.M. D-1751
5. 9" THICK LANDING, RAMPS, AND CURBS FROM EXPANSION JOINT TO EXPANSION JOINT ON MAJOR OR COLLECTOR STREETS. 4" THICK LANDING AND RAMPS ON LOCAL STREETS.
6. REDUCE CURB HEIGHT BY 1" MAXIMUM IN ORDER TO ACCOMMODATE A 12" SEPARATION BETWEEN RAMPS.
7. MAINTAIN THE PLANE OF THE LANDING ONE FOOT (1ft.) BEYOND THE TOP OF LANDING.
8. ADDITIONAL SIDEWALK PER NOTE 2 & 5 WHEN SIGNAL POLES ARE LOCATED IN THESE AREAS.

DETAIL NO.	City of Phoenix STANDARD DETAIL	CURB RAMP DETAIL – 20' RADIUS LANDSCAPE PLANTERS, BOTH/ONE LEG(S)	APPROVED CITY ENGINEER 07/01/2015 DATE	DETAIL NO.
P1238–1				P1238–1

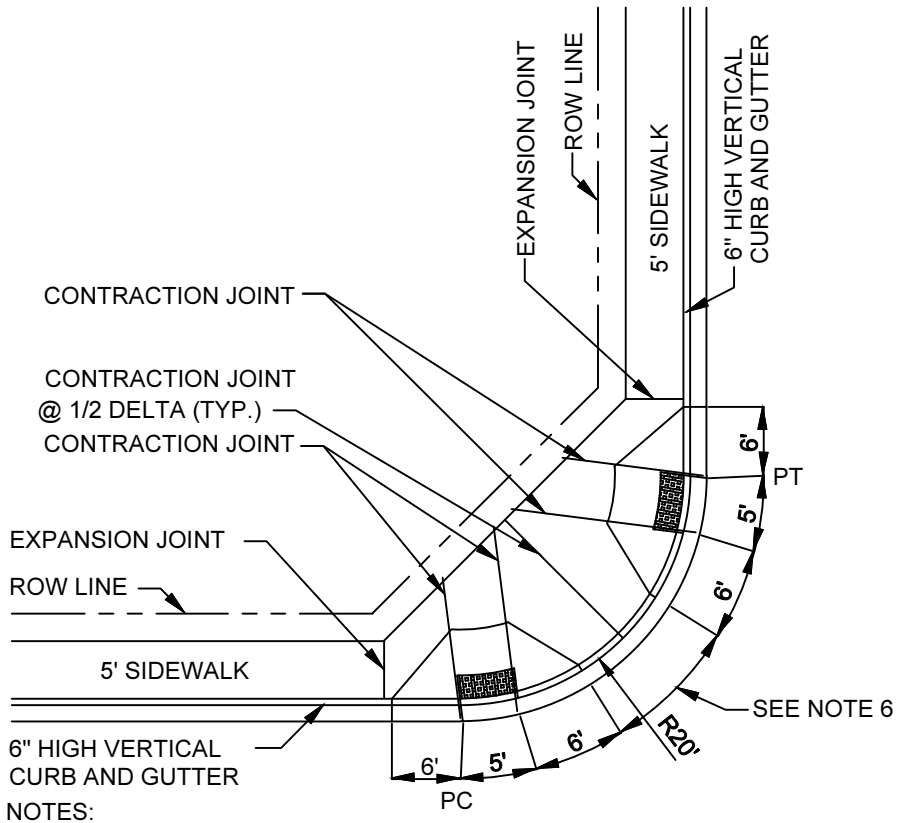

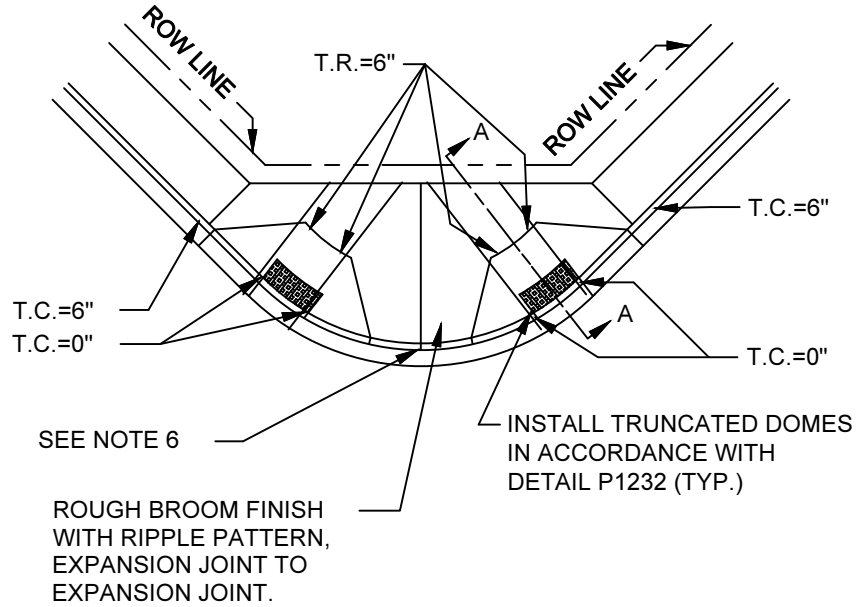

SECTION A-A (TYP.)

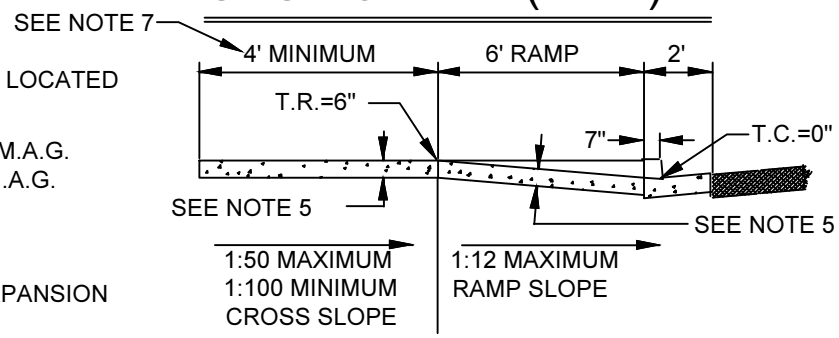

NOTES:

1. CONTROL ELEVATIONS ARE SHOWN IN RELATION TO THE GUTTER AND ARE LOCATED RADIALLY. GUTTER ELEVATION=0".
2. CONCRETE CURB AND GUTTER AT CURB RETURNS WITH RAMPS SHALL BE M.A.G. CLASS A. CONCRETE SIDEWALKS AND RAMPS AT CURB RETURNS SHALL BE M.A.G. CLASS A.
3. RAMP CURBS MAY BE POURED MONOLITHIC WITH A CONTRACTION JOINT.
4. EXPANSION JOINT FILLER SHALL BE 1/2" BITUMINOUS TYPE PREFORMED EXPANSION JOINT FILLER A.S.T.M. D-1751
5. 9" THICK LANDING, RAMPS, AND CURBS FROM EXPANSION JOINT TO EXPANSION JOINT ON MAJOR OR COLLECTOR STREETS. 4" THICK LANDING AND RAMPS ON LOCAL STREETS.
6. REDUCE CURB HEIGHT BY 1" MAXIMUM IN ORDER TO ACCOMMODATE A 12" SEPARATION BETWEEN RAMPS.
7. MAINTAIN THE PLANE OF THE LANDING ONE FOOT (1ft.) BEYOND THE TOP OF LANDING

DETAIL NO.	City of Phoenix STANDARD DETAIL	CURB RAMP DETAIL – 20' RADIUS NO LANDSCAPE PLANTERS	APPROVED CITY ENGINEER 07/01/2015 DATE	DETAIL NO.
P1238–2				P1238–2

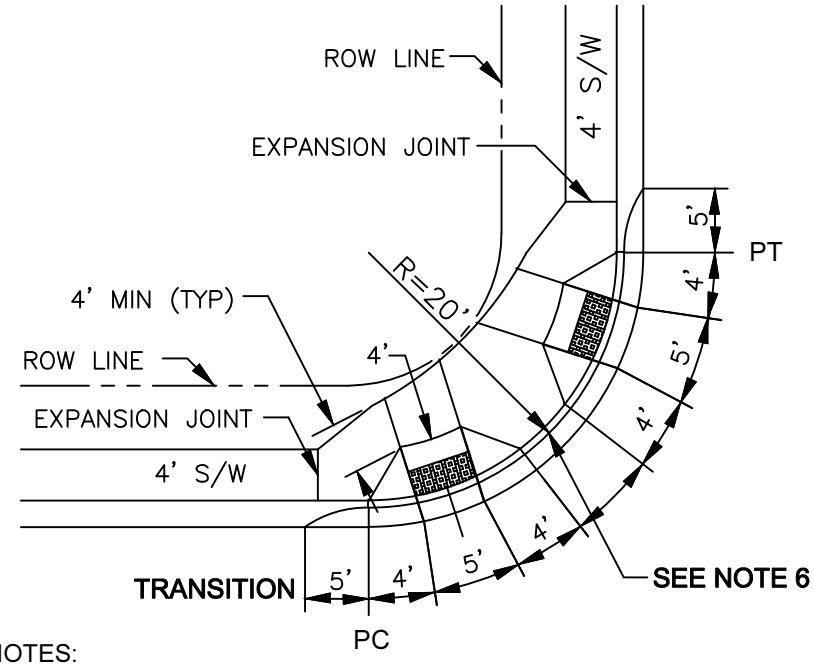

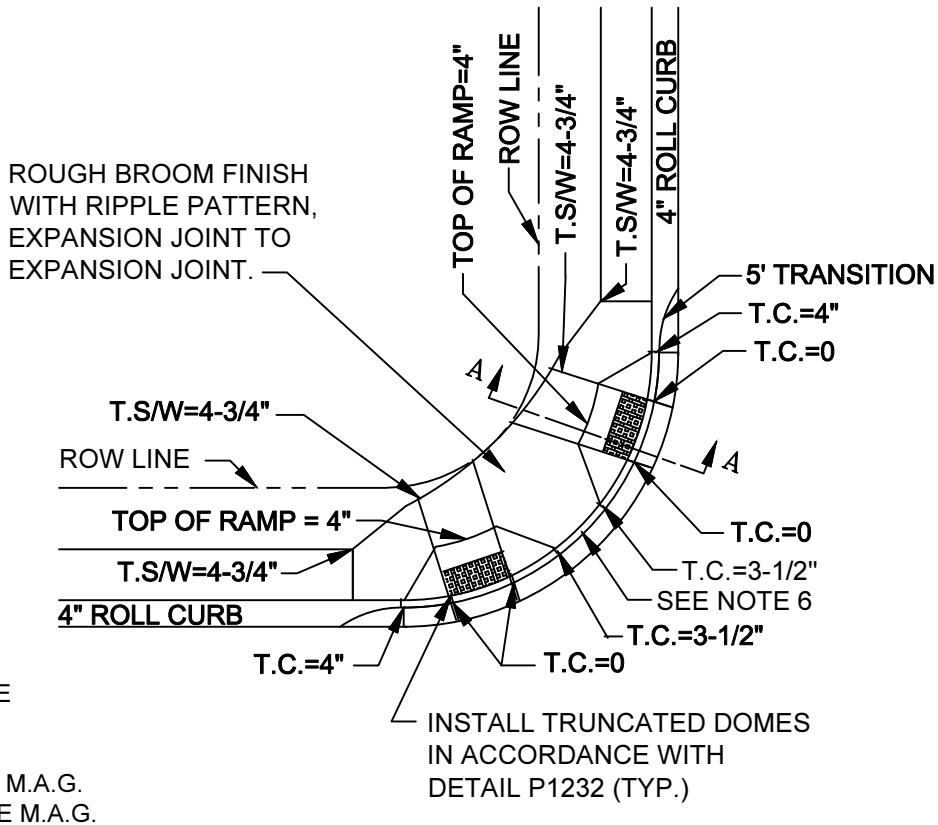

NOTES:

1. CONTROL ELEVATIONS ARE SHOWN IN RELATION TO THE GUTTER AND ARE LOCATED RADIALLY. GUTTER ELEVATION=0".
2. CONCRETE CURB AND GUTTER AT CURB RETURNS WITH RAMPS SHALL BE M.A.G. CLASS A. CONCRETE SIDEWALKS AND RAMPS AT CURB RETURNS SHALL BE M.A.G. CLASS A.
3. RAMP CURBS MAY BE POURED MONOLITHIC WITH A CONTRACTION JOINT.
4. EXPANSION JOINT FILLER SHALL BE 1/2" BITUMINOUS TYPE PREFORMED EXPANSION JOINT FILLER A.S.T.M. D-1751
5. 9" THICK LANDING, RAMPS, AND CURBS FROM EXPANSION JOINT TO EXPANSION JOINT ON MAJOR OR COLLECTOR STREETS. 4" THICK LANDING AND RAMPS ON LOCAL STREETS.
6. REDUCE CURB HEIGHT BY 1" MAXIMUM IN ORDER TO ACCOMMODATE A 12" SEPARATION BETWEEN RAMPS.
7. MAINTAIN THE PLANE OF THE LANDING ONE FOOT (1ft.) BEYOND THE TOP OF LANDING.

SECTION A-A (TYP.)

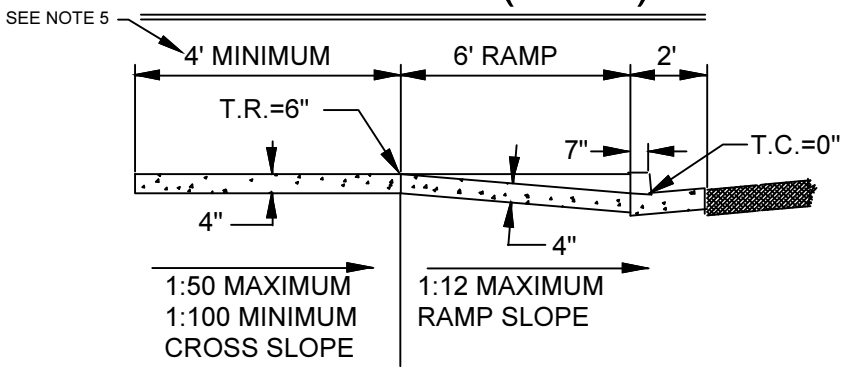

DETAIL NO.	City of Phoenix STANDARD DETAIL	CURB RAMP DETAIL – 20' RADIUS 4" VERTICAL CURB RETURN	APPROVED CITY ENGINEER 07/01/2015 DATE	DETAIL NO.
P1239				P1239

SECTION A-A (TYP.)

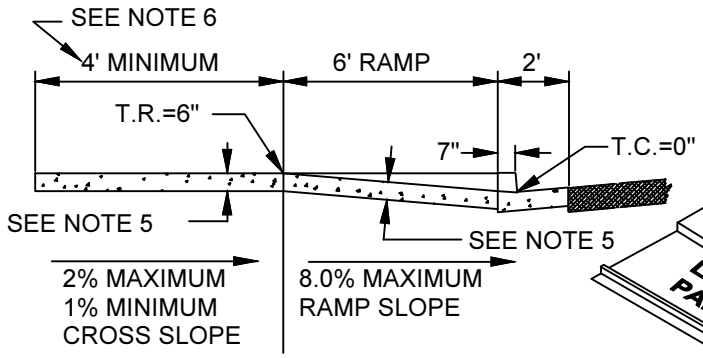

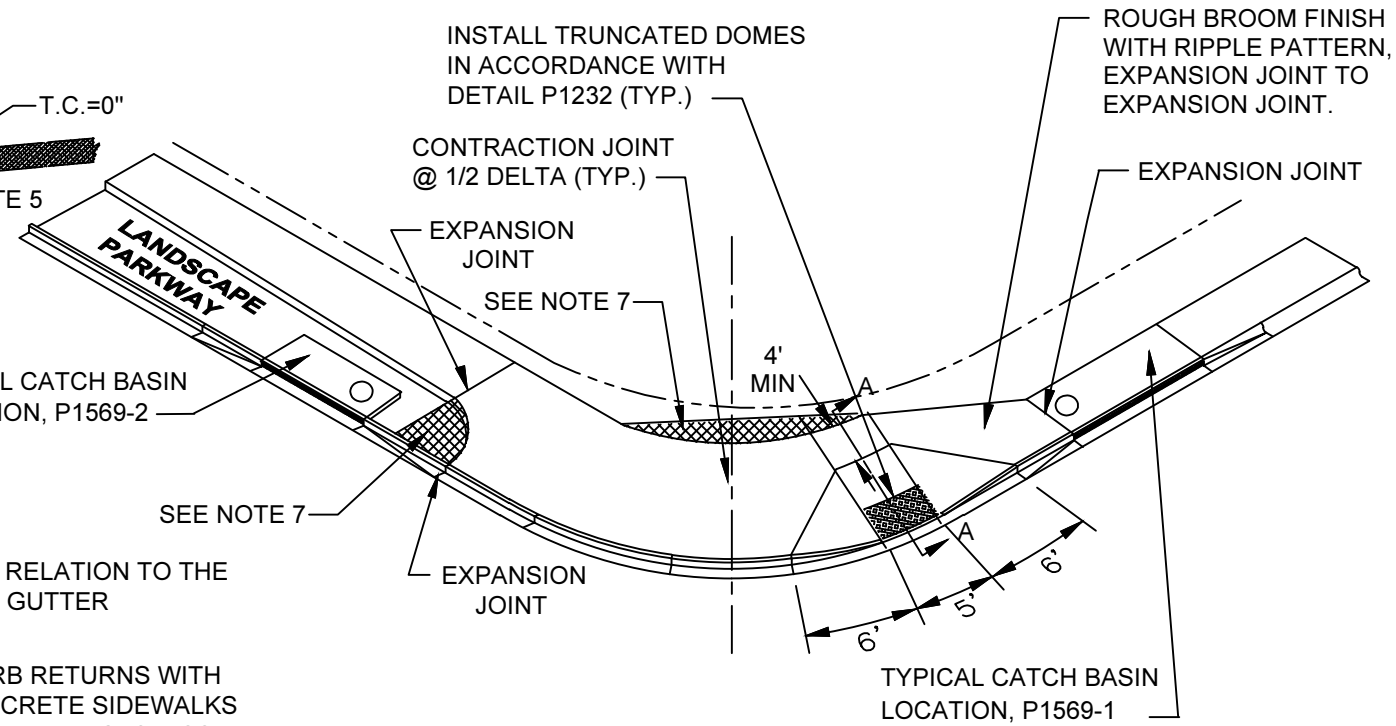

NOTES:

1. CONTROL ELEVATIONS ARE SHOWN IN RELATION TO THE GUTTER AND ARE LOCATED RADIALLY. GUTTER ELEVATION=0".
2. CONCRETE CURB AND GUTTER AT CURB RETURNS WITH RAMPS SHALL BE M.A.G. CLASS A. CONCRETE SIDEWALKS AND RAMPS AT CURB RETURNS SHALL BE M.A.G. CLASS A.
3. RAMP CURBS MAY BE POURED MONOLITHIC WITH A CONTRACTION JOINT.
4. EXPANSION JOINT FILLER SHALL BE 1/2" BITUMINOUS TYPE PREFORMED EXPANSION JOINT FILLER A.S.T.M. D-1751
5. 9" THICK LANDING, RAMPS, AND CURBS FROM EXPANSION JOINT TO EXPANSION JOINT ON MAJOR OR COLLECTOR STREETS. 4" THICK LANDING AND RAMPS ON LOCAL STREETS.
6. MAINTAIN THE PLANE OF THE LANDING ONE FOOT (1ft.) BEYOND THE TOP OF LANDING.
7. ADDITIONAL SIDEWALK PER NOTE 2 & 5 WHEN SIGNAL POLES ARE LOCATED IN THESE AREAS.

DETAIL NO.	City of Phoenix STANDARD DETAIL	SINGLE CURB RAMP DETAIL ALL RADIUS CURB RETURNS	APPROVED CITY ENGINEER 07/01/2015 DATE	DETAIL NO.
P1240				P1240

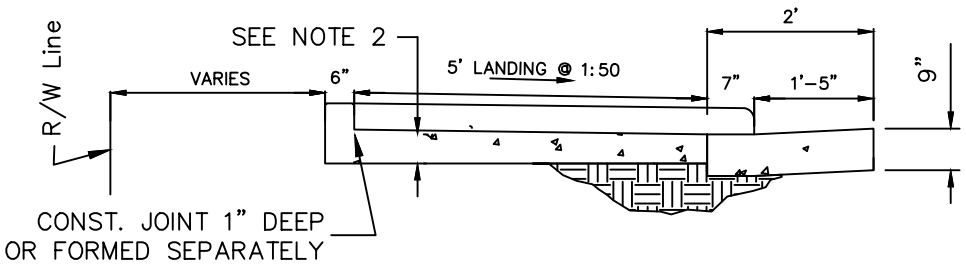

SECTION A-A

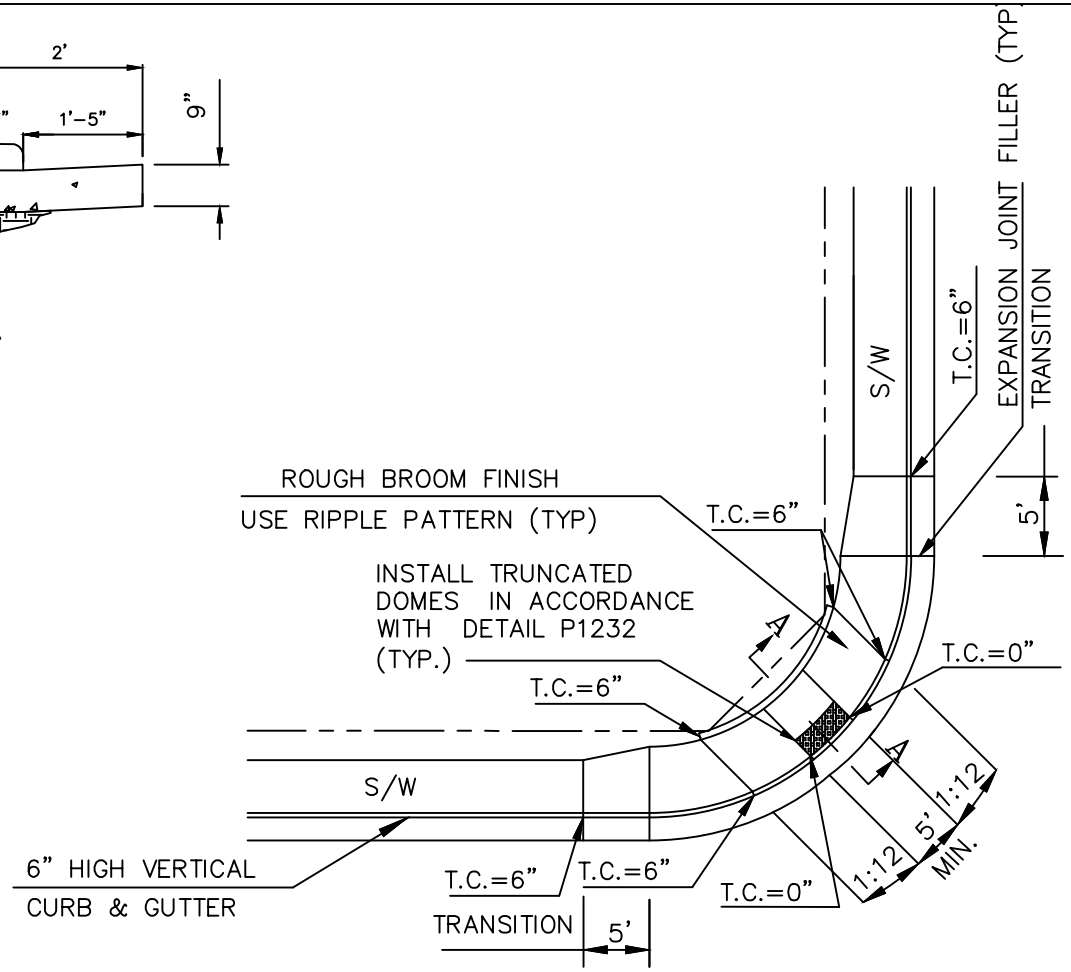

NOTES:

1) CONCRETE CURB & GUTTER AT CURB RETURNS WITH RAMPS SHALL BE M.A.G. CLASS A.
CONCRETE SIDEWALK AND RAMPS AT CURB RETURNS SHALL BE M.A.G. CLASS A.

2) 9" LANDING AND RAMPS ON MAJOR OR COLLECTOR STREETS
AND 4" LANDING AND RAMPS ON LOCAL STREETS.

DETAIL NO.	City of Phoenix STANDARD DETAIL	SINGLE CURB RAMP DETAIL WITH LIMITED R/W	APPROVED CITY ENGINEER 12/10/2012 DATE	DETAIL NO.
P1240-1				P1240-1

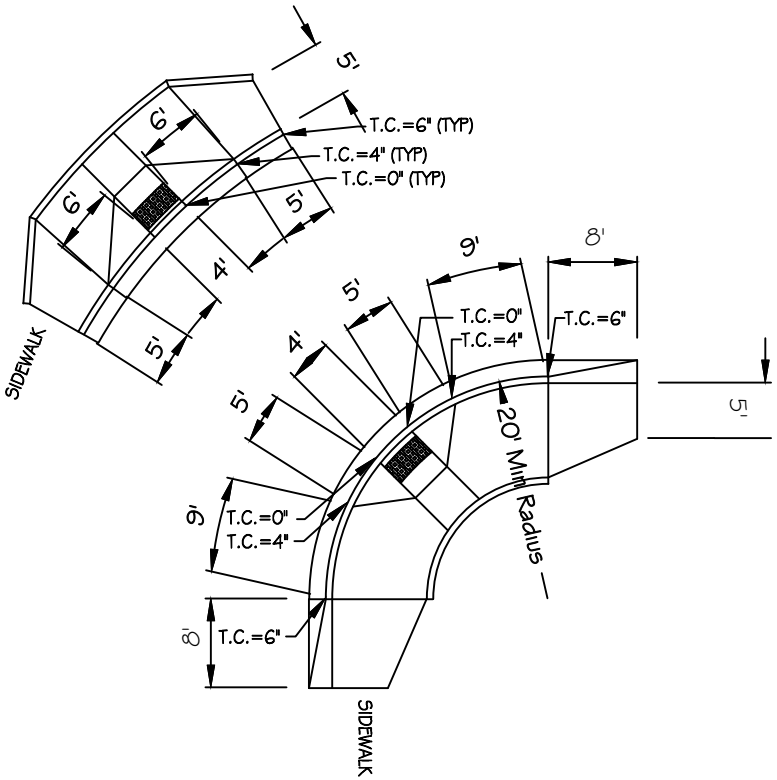

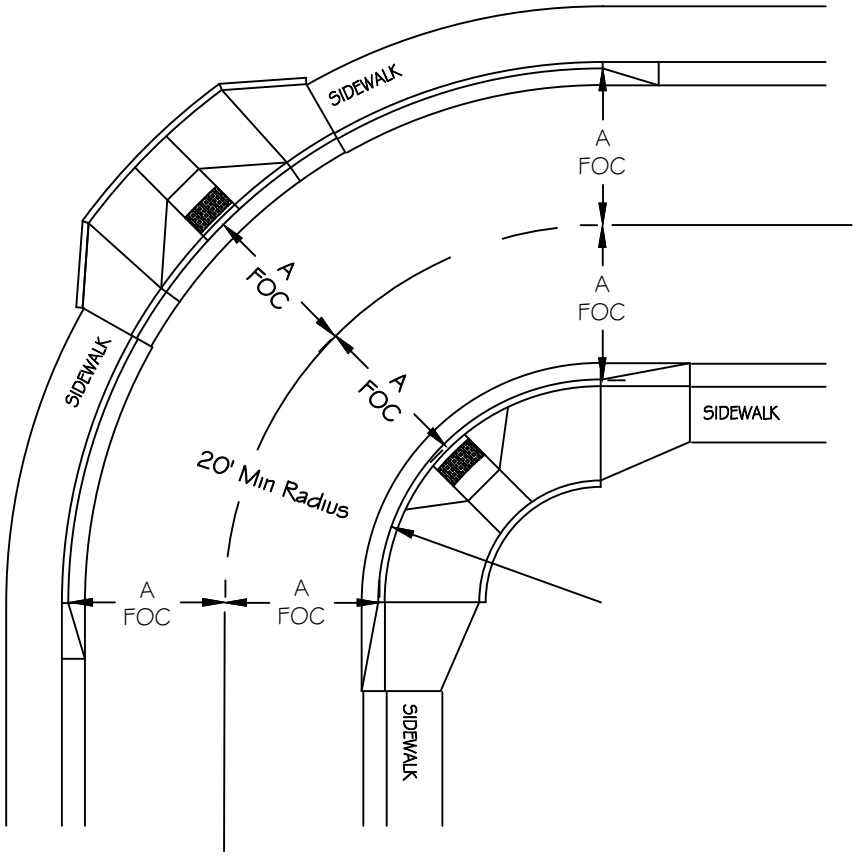

DETAIL NO.	City of Phoenix STANDARD DETAIL	CURB RAMP DETAIL WITH ATTACHED S/W (CORNER AT A DIAGONAL)	APPROVED CITY ENGINEER 07/01/2015 DATE	DETAIL NO.
P1240–2				P1240–2

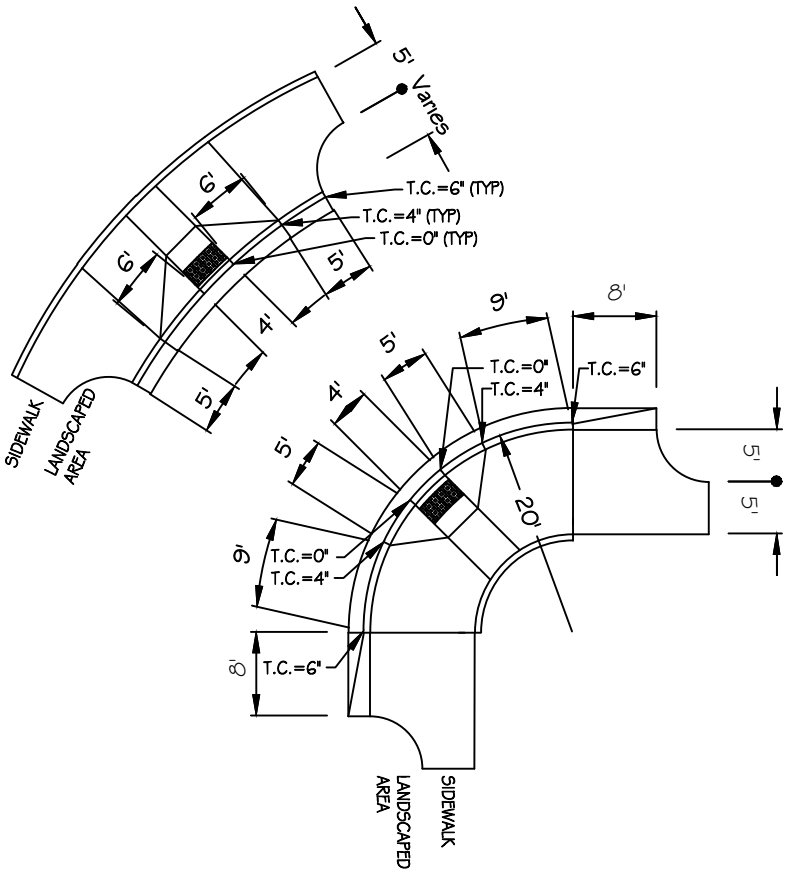

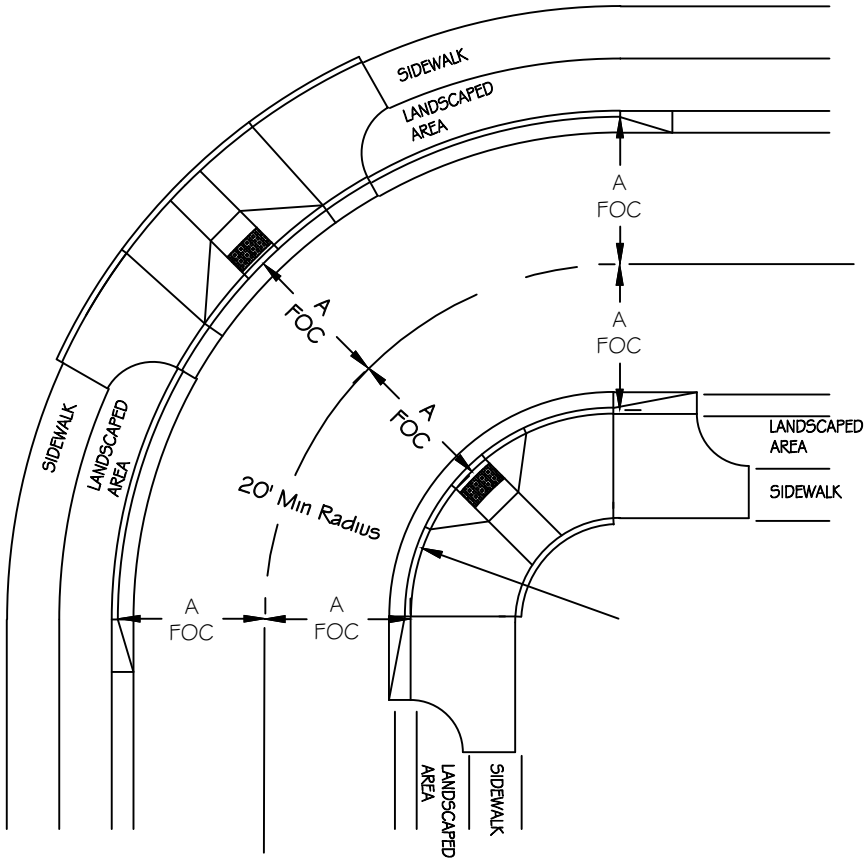

DETAIL NO.	City of Phoenix STANDARD DETAIL	CURB RAMP DETAIL WITH DETACHED S/W (CORNER AT A DIAGONAL)	APPROVED CITY ENGINEER 07/01/2015 DATE	DETAIL NO.
P1240–3				P1240–3

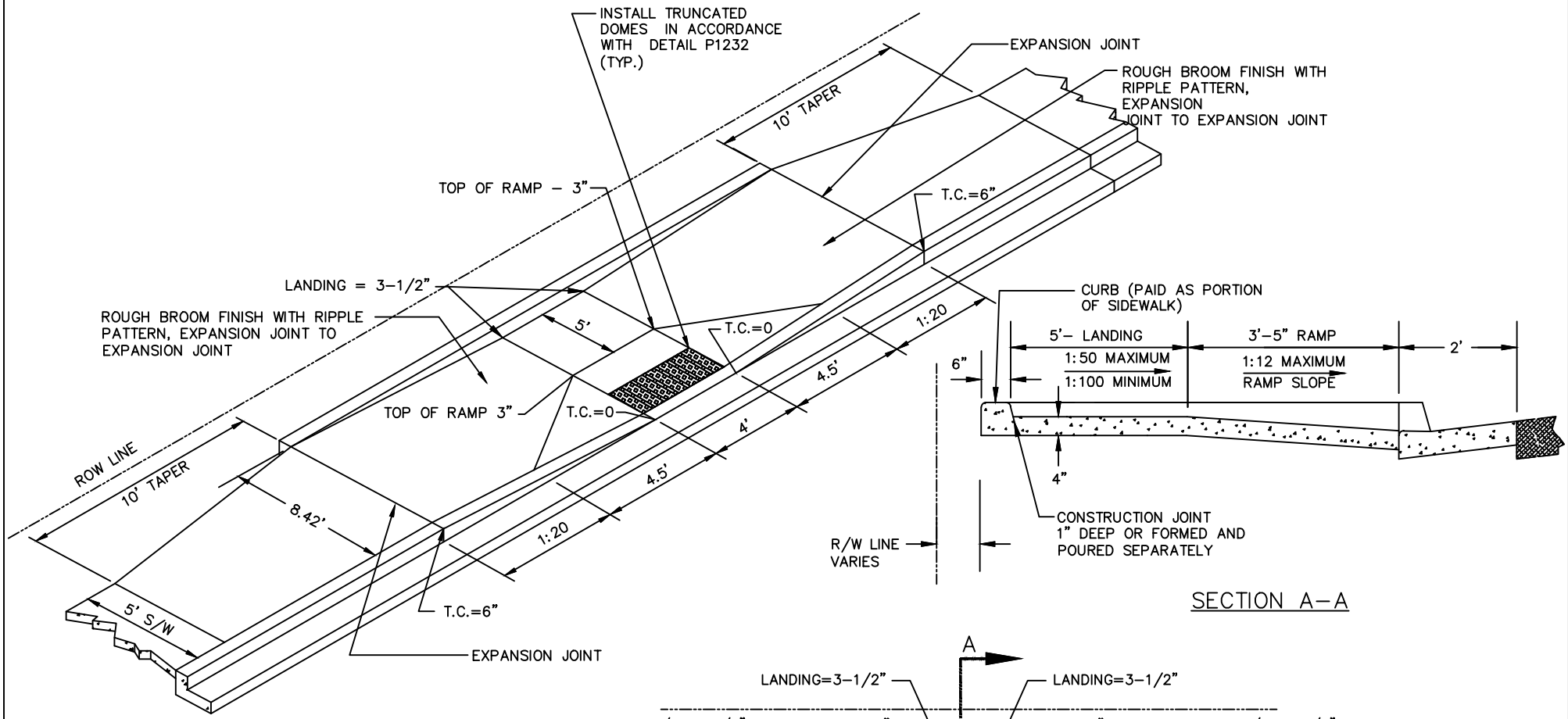

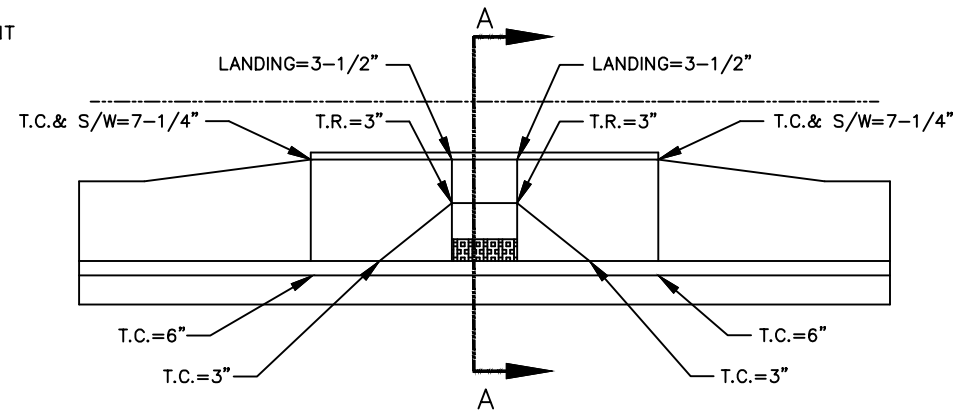

CONTROL ELEVATIONS

NOTES:

1. CONTROL ELEVATIONS SHOWN ARE IN RELATION TO THE GUTTER. GUTTER ELEVATION = 0".
2. CLASS "A" CONCRETE TO BE USED AS PER SECTION 725.
3. EXPANSION JOINT FILLER SHALL BE 1/2" BITUMINOUS TYPE PREFORMED EXPANSION JOINT FILLER A.S.T.M. D–1751.

DETAIL NO.	City of Phoenix STANDARD DETAIL	CURB RAMP DETAIL (MID BLOCK)	APPROVED CITY ENGINEER 12/10/2012 DATE	DETAIL NO.
P1241–1				P1241–1

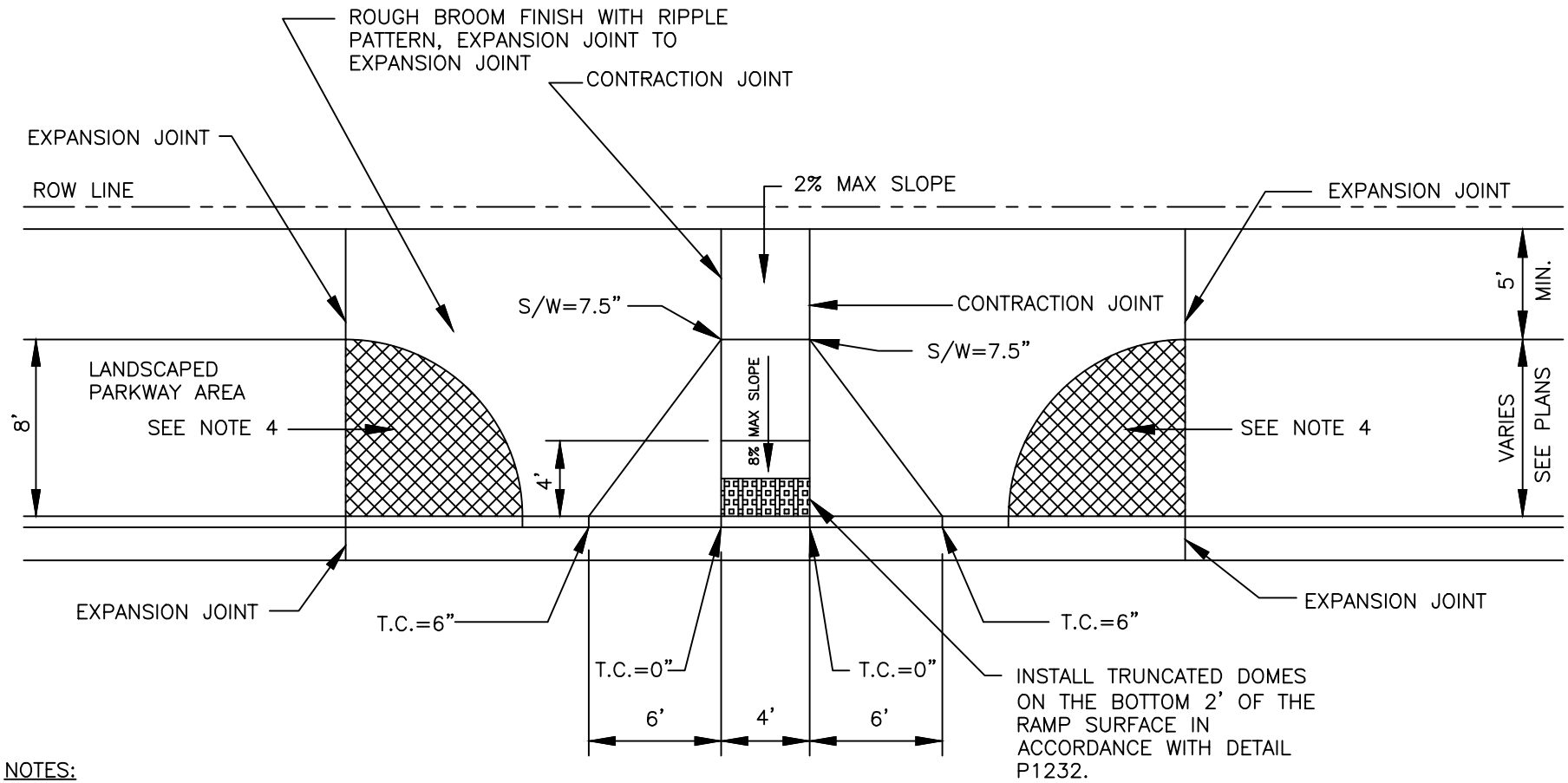

NOTES:

1. CONTROL ELEVATIONS SHOWN ARE IN RELATION TO THE GUTTER. GUTTER ELEVATION = 0".
2. CLASS "A" CONCRETE TO BE USED AS PER SECTION 725.
3. EXPANSION JOINT FILLER SHALL BE 1/2" BITUMINOUS TYPE PREFORMED EXPANSION JOINT FILLER A.S.T.M. D-1751.
4. ADDITIONAL SIDEWALK PER NOTE 2 WHEN SIGNAL POLES ARE LOCATED IN THESE AREAS.

DETAIL NO.	City of Phoenix STANDARD DETAIL	CURB RAMP DETAIL (MID BLOCK) WITH DETACHED SIDEWALK	APPROVED CITY ENGINEER 12/10/2012 DATE	DETAIL NO.
P1241-2				P1241-2

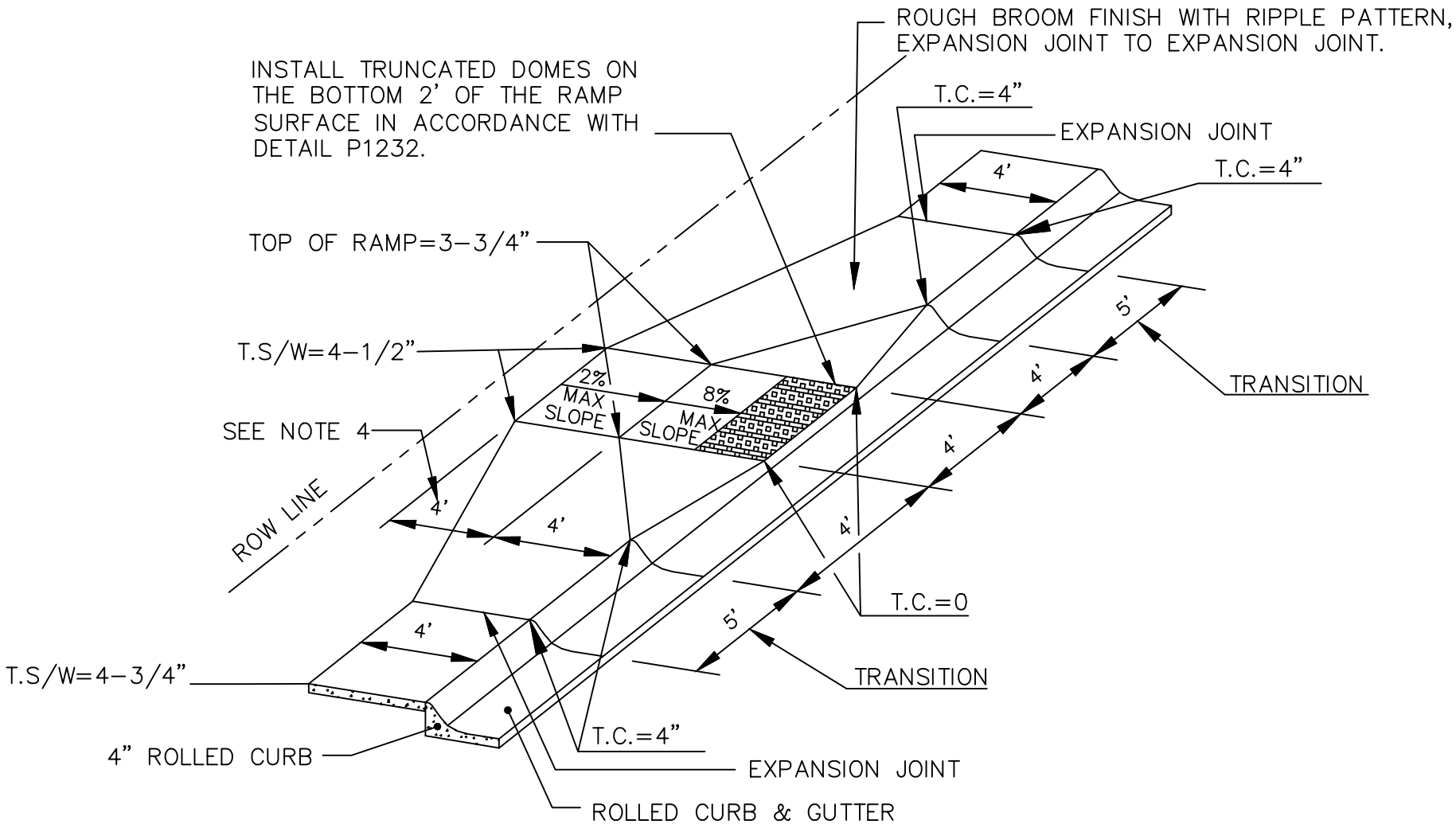

NOTES:

1. CONTROL ELEVATIONS SHOWN ARE IN RELATION TO THE GUTTER. GUTTER ELEVATION = 0".
2. CLASS "A" CONCRETE TO BE USED AS PER SECTION 725.
3. EXPANSION JOINT FILLER SHALL BE 1/2" BITUMINOUS TYPE PREFORMED EXPANSION JOINT FILLER A.S.T.M. D-1751.
4. MAINTAIN THE PLANE OF THE LANDING ONE FOOT (1ft.) BEYOND THE TOP OF LANDING

DETAIL NO.	City of Phoenix STANDARD DETAIL	CURB RAMP DETAIL (MID BLOCK) WITH 4" ROLL CURB	APPROVED CITY ENGINEER 12/10/2012 DATE	DETAIL NO.
P1241-3				P1241-3

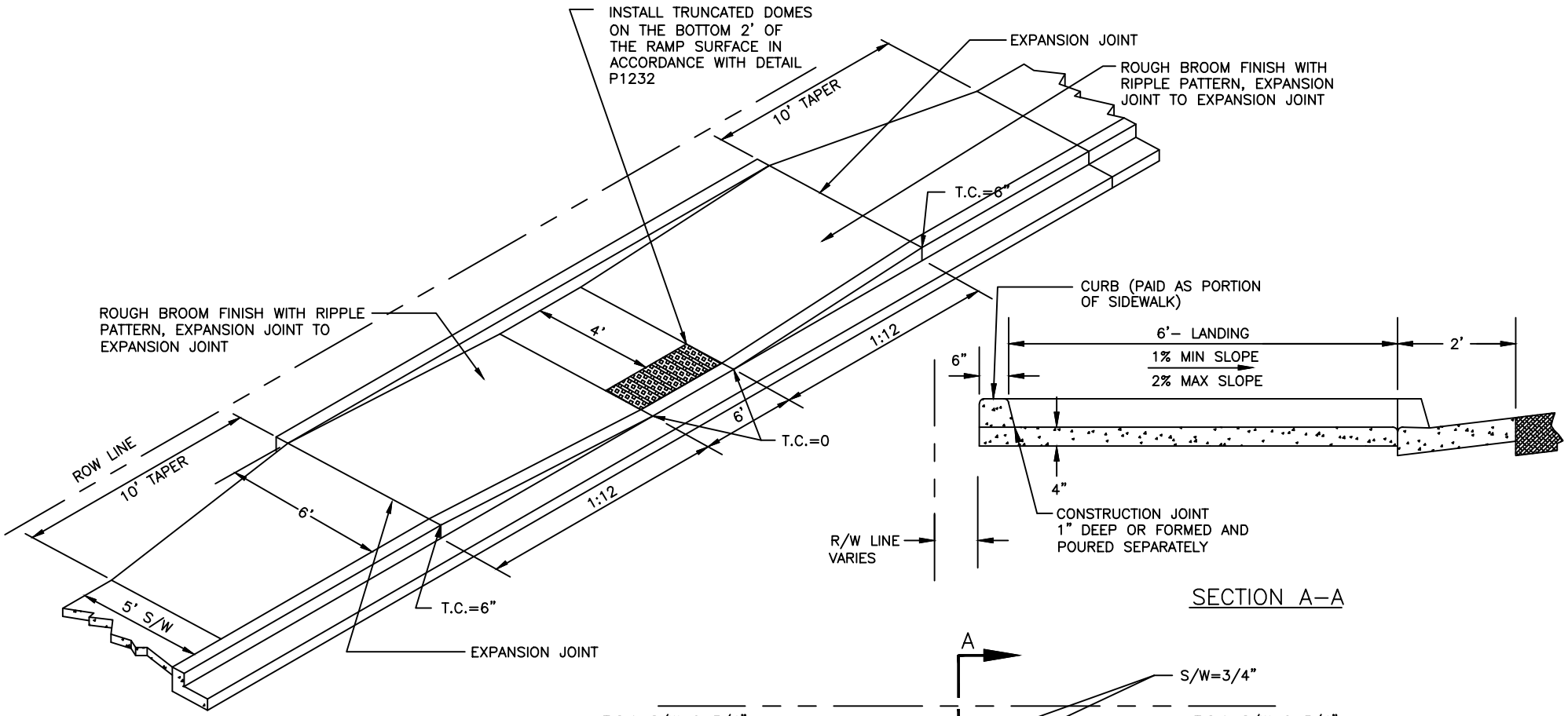

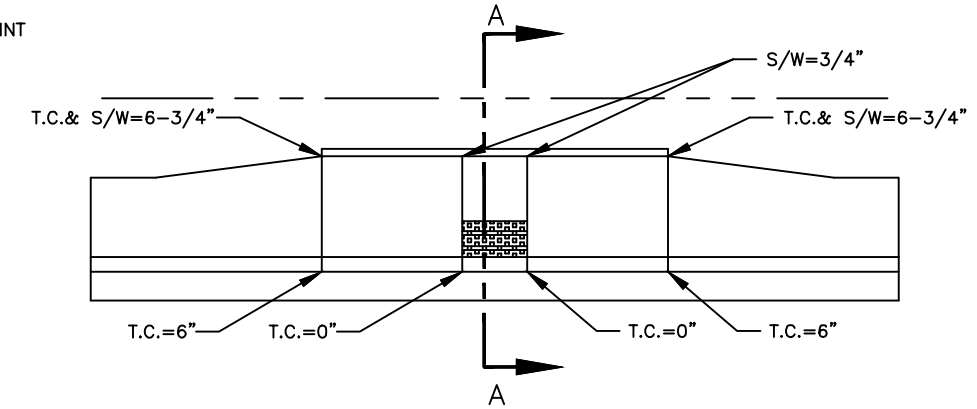

CONTROL ELEVATIONS

NOTES:

1. CONTROL ELEVATIONS SHOWN ARE IN RELATION TO THE GUTTER. GUTTER ELEVATION = 0".
2. CLASS "A" CONCRETE TO BE USED AS PER SECTION 725.
3. EXPANSION JOINT FILLER SHALL BE 1/2" BITUMINOUS TYPE PREFORMED EXPANSION JOINT FILLER A.S.T.M. D–1751.

DETAIL NO.	City of Phoenix STANDARD DETAIL	CURB RAMP DETAIL (MID BLOCK) MODIFIED (LIMITED RIGHT OF WAY)	APPROVED CITY ENGINEER 12/10/2012 DATE	DETAIL NO.
P1241–4				P1241–4

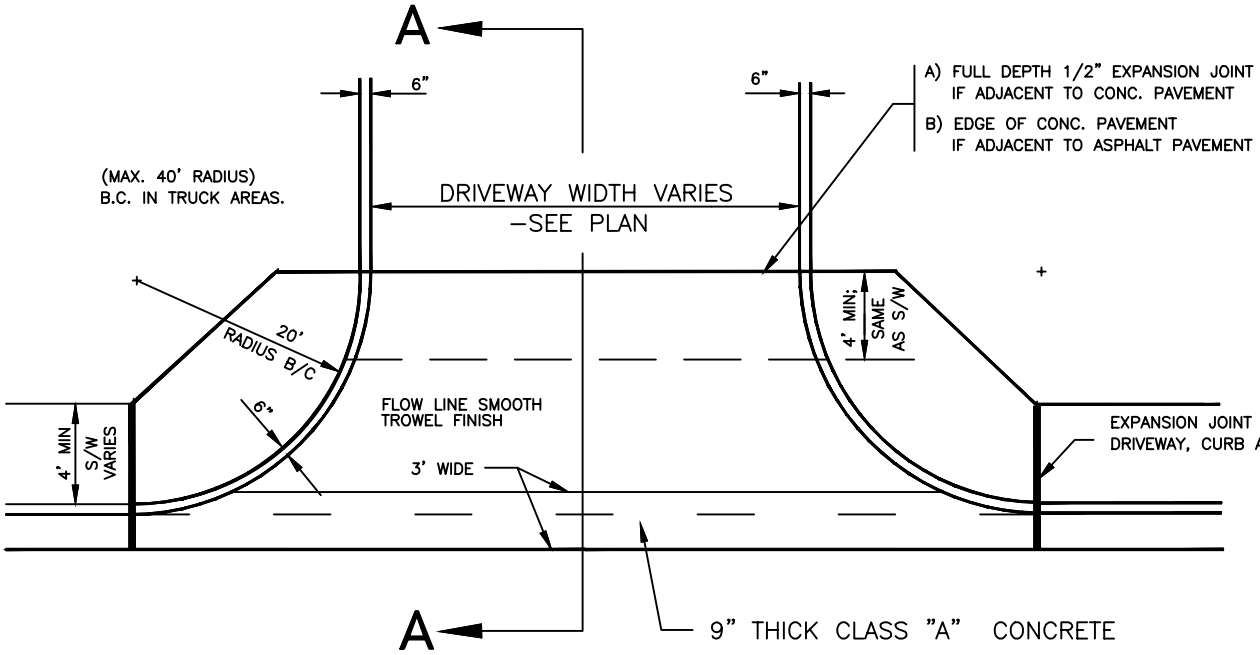

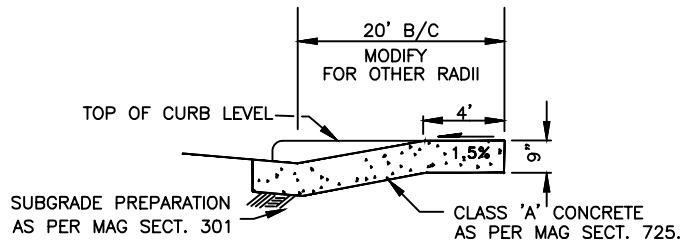

SECTION A–A

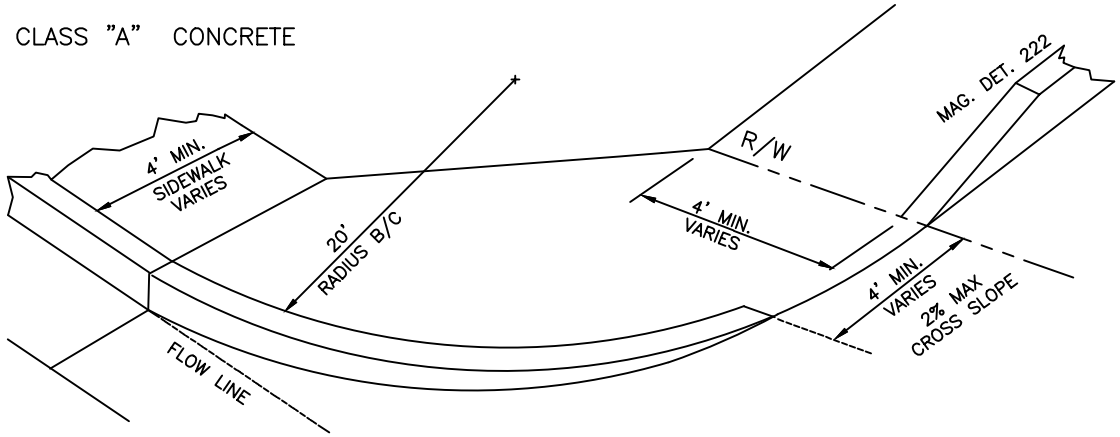

NOTES:

1. CONTROL ELEVATIONS ARE IN RELATION TO THE GUTTER AND ARE LOCATED RADIALLY. GUTTER ELEVATION = 0".
2. CONCRETE CURB & GUTTER AT CURB RETURNS WITH RAMPS SHALL BE M.A.G. CLASS A. CONCRETE SIDEWALK AND RAMPS AT CURB RETURNS SHALL BE M.A.G. CLASS A.
3. RAMP CURBS MAY BE POURED MONOLITHIC WITH A CONSTRUCTION JOINT.
4. EXPANSION JOINT FILLER SHALL BE 1/2" BITUMINOUS TYPE PREFORMED EXPANSION JOINT FILLER A.S.T.M. D–1751
5. MEASUREMENT AND PAYMENT FOR CONCRETE DRIVEWAY SHALL BE BY THE SQUARE FOOT OF 9" CLASS "A" CONCRETE PLACED. MEASUREMENT AND PAYMENT FOR THE CURB RETURNS AND THE SIDEWALK AT THE RETURNS SHALL BE MADE UNDER THEIR SEPARATE PAY ITEMS.

DETAIL NO.	City of Phoenix STANDARD DETAIL	RETURN TYPE DRIVEWAYS WITH ATTACHED SIDEWALK	APPROVED	DETAIL NO.
P1243			Mario Saldamando — CITY ENGINEER; 7/19/04 — DATE	P1243

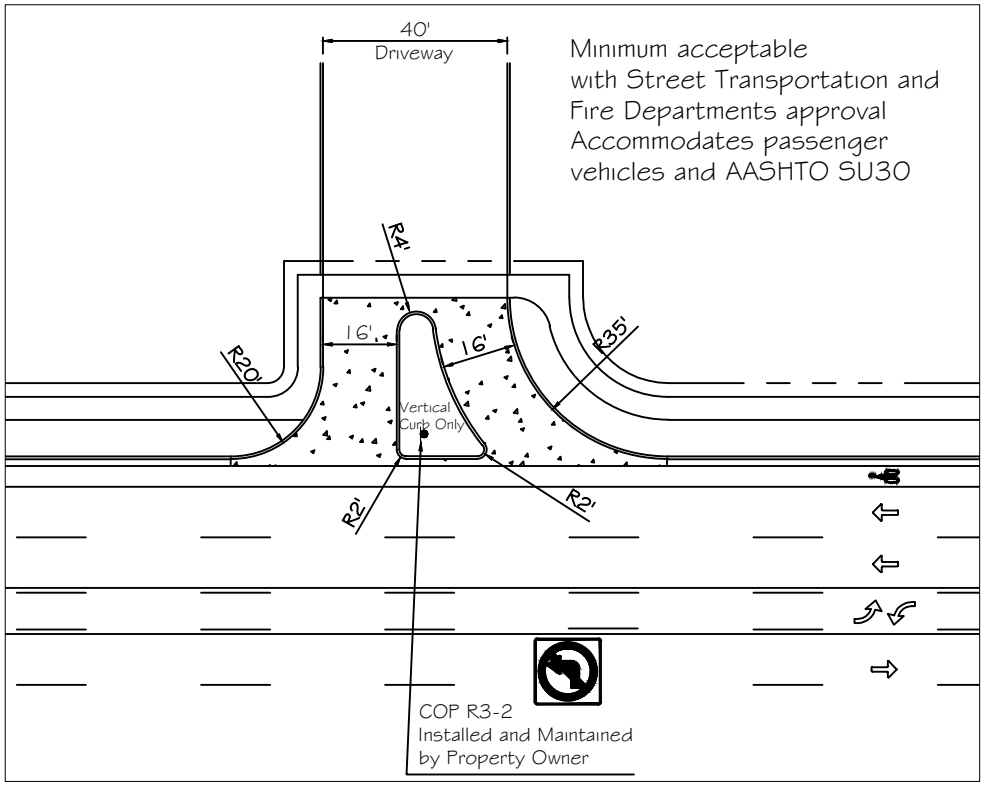

WITHOUT DECELERATION LANE
PREVENTS LEFT TURN IN
35' RETURN

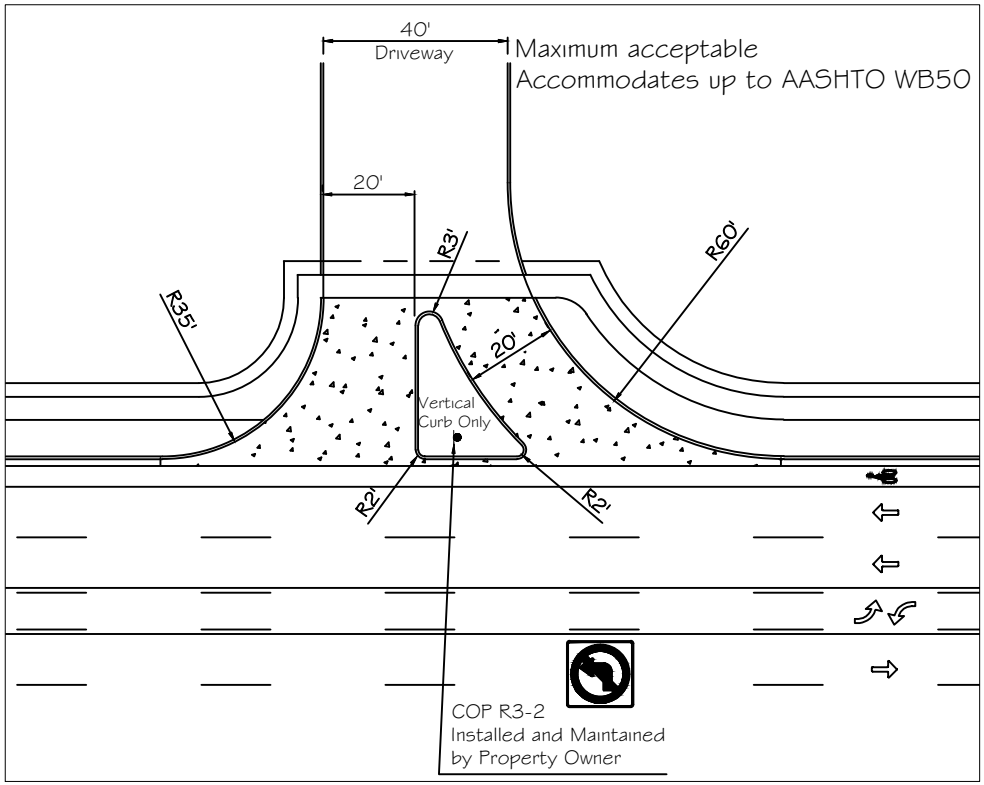

WITHOUT DECELERATION LANE
PREVENTS LEFT TURN IN
60' RETURN

DETAIL NO.				
P1243–1	City of Phoenix STANDARD DETAIL	LIMITED ACCESS DRIVEWAY WITH NO LT–IN AND WITHOUT DECELERATION LANE	APPROVED CITY ENGINEER 07/01/2015 DATE	DETAIL NO. P1243–1

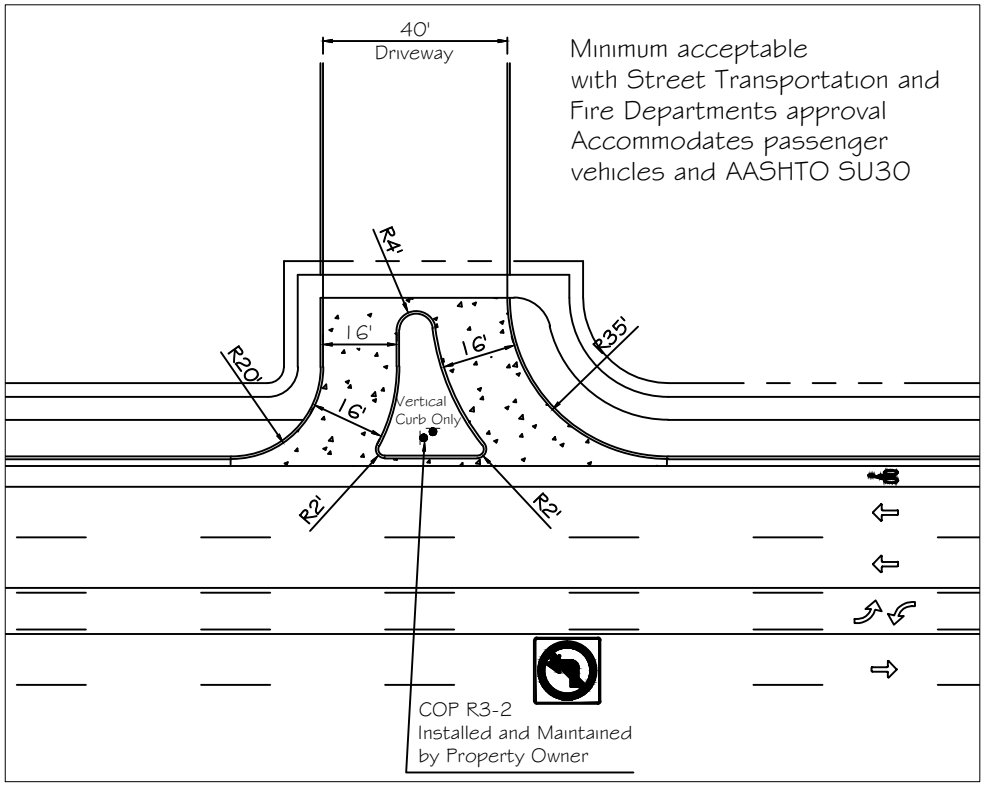

WITHOUT DECELERATION LANE
PREVENTS LEFT TURN IN/OUT
35' RETURN

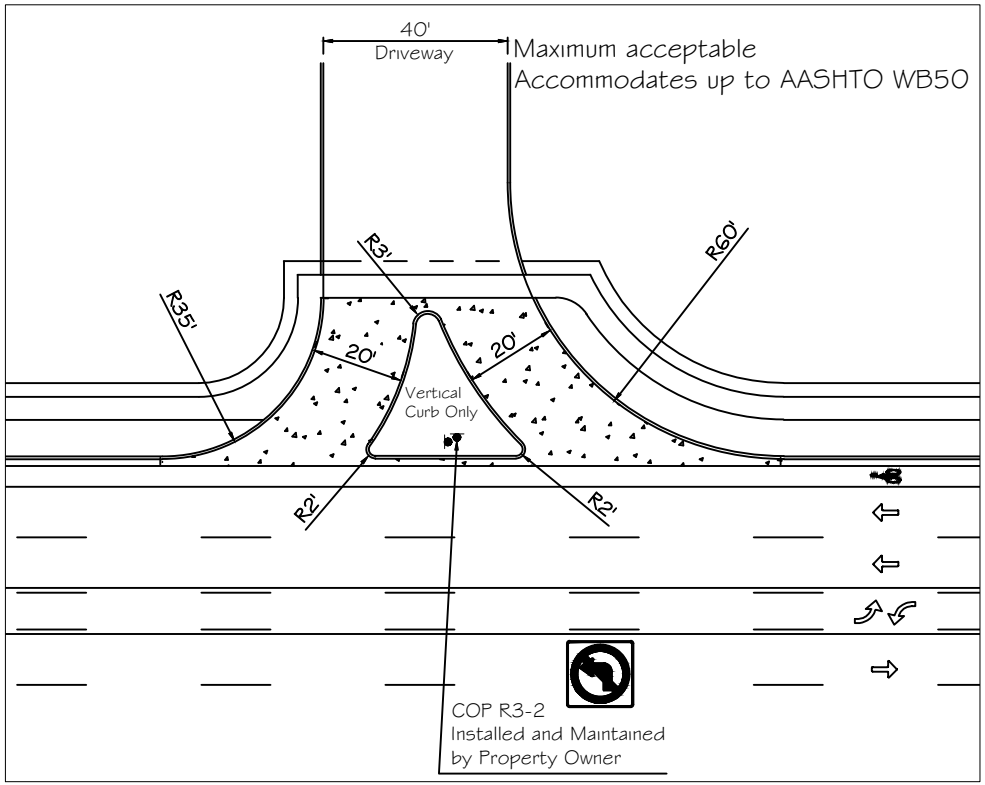

WITHOUT DECELERATION LANE
PREVENTS LEFT TURN IN/OUT
60' RETURN

DETAIL NO.	City of Phoenix STANDARD DETAIL	LIMITED ACCESS DRIVEWAY WITH NO LT-IN/OUT AND WITHOUT DECELERATION LANE	APPROVED CITY ENGINEER 07/01/2015 DATE	DETAIL NO.
P1243-2				P1243-2

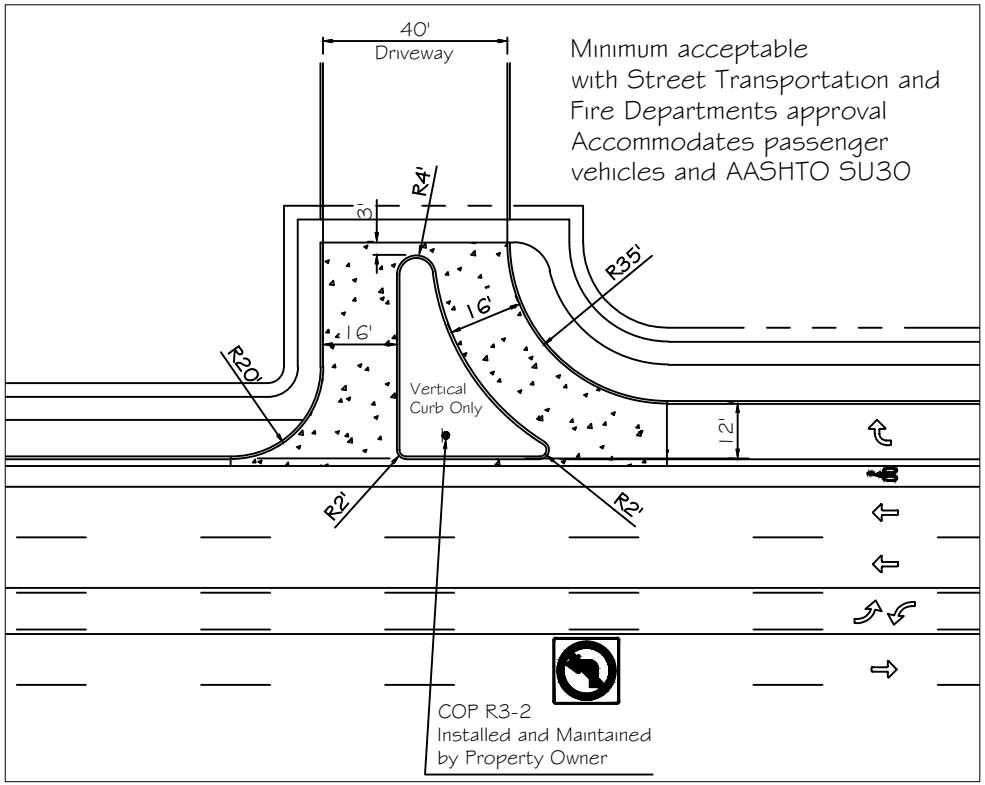

WITH DECELERATION LANE
PREVENTS LEFT TURN IN
35' RETURN

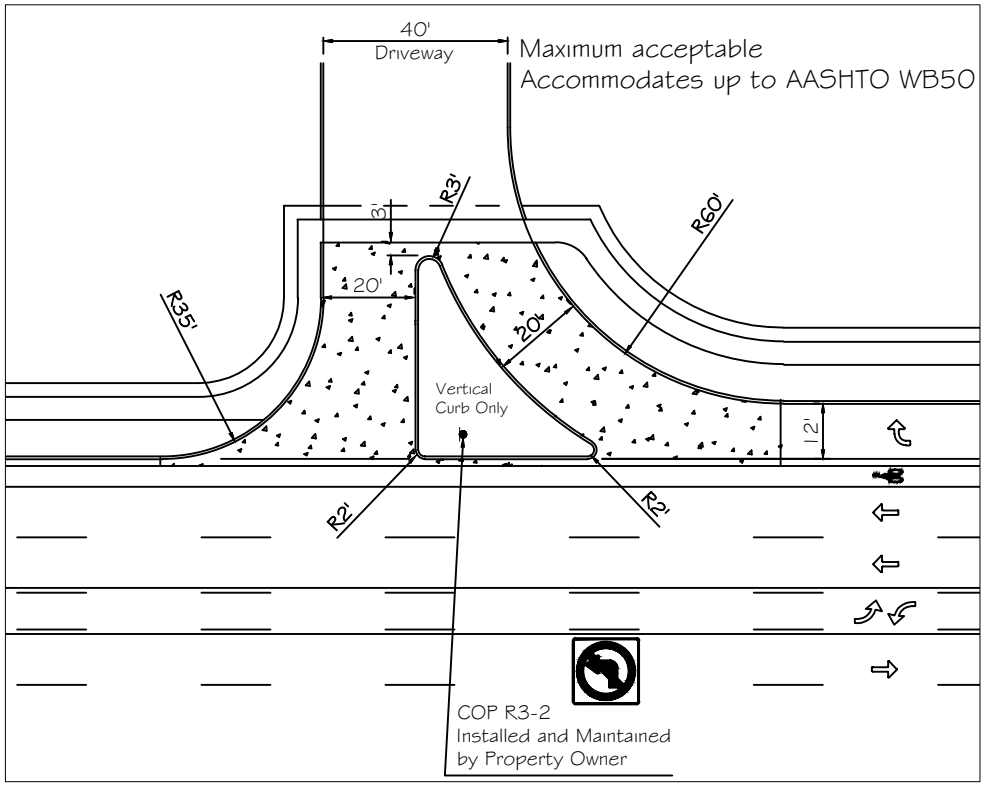

WITH DECELERATION LANE
PREVENTS LEFT TURN IN
60' RETURN

DETAIL NO.	City of Phoenix STANDARD DETAIL	LIMITED ACCESS DRIVEWAY WITH NO LT-IN AND WITH DECELERATION LANE	APPROVED CITY ENGINEER 07/01/2015 DATE	DETAIL NO.
P1243-3				P1243-3

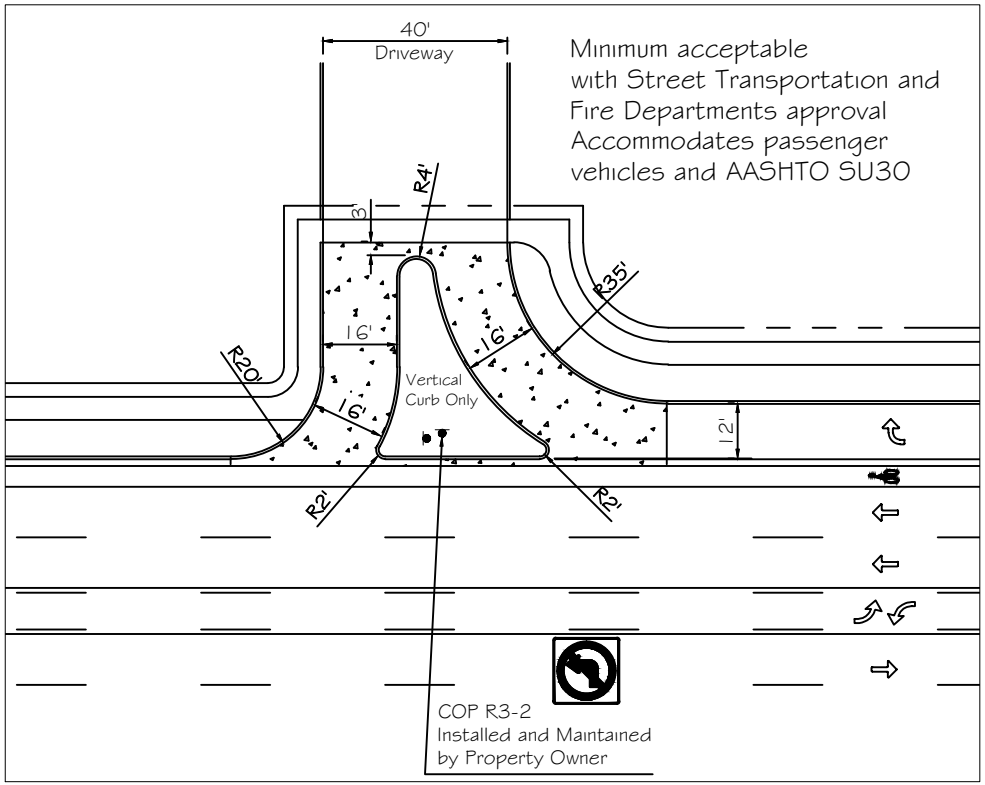

WITH DECELERATION LANE
PREVENTS LEFT TURN IN/OUT
35' RETURN

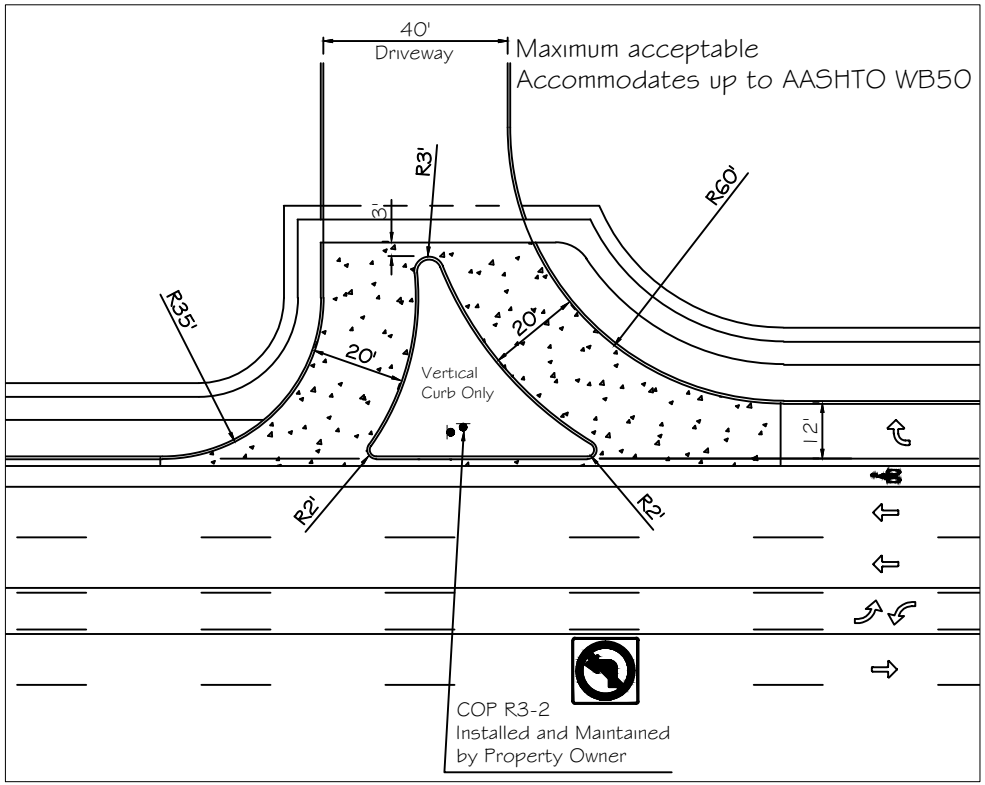

WITH DECELERATION LANE
PREVENTS LEFT TURN IN/OUT
60' RETURN

DETAIL NO.	City of Phoenix STANDARD DETAIL	LIMITED ACCESS DRIVEWAY WITH NO LT-IN/OUT AND WITH DECELERATION LANE	APPROVED CITY ENGINEER 07/01/2015 DATE	DETAIL NO.
P1243-4				P1243-4

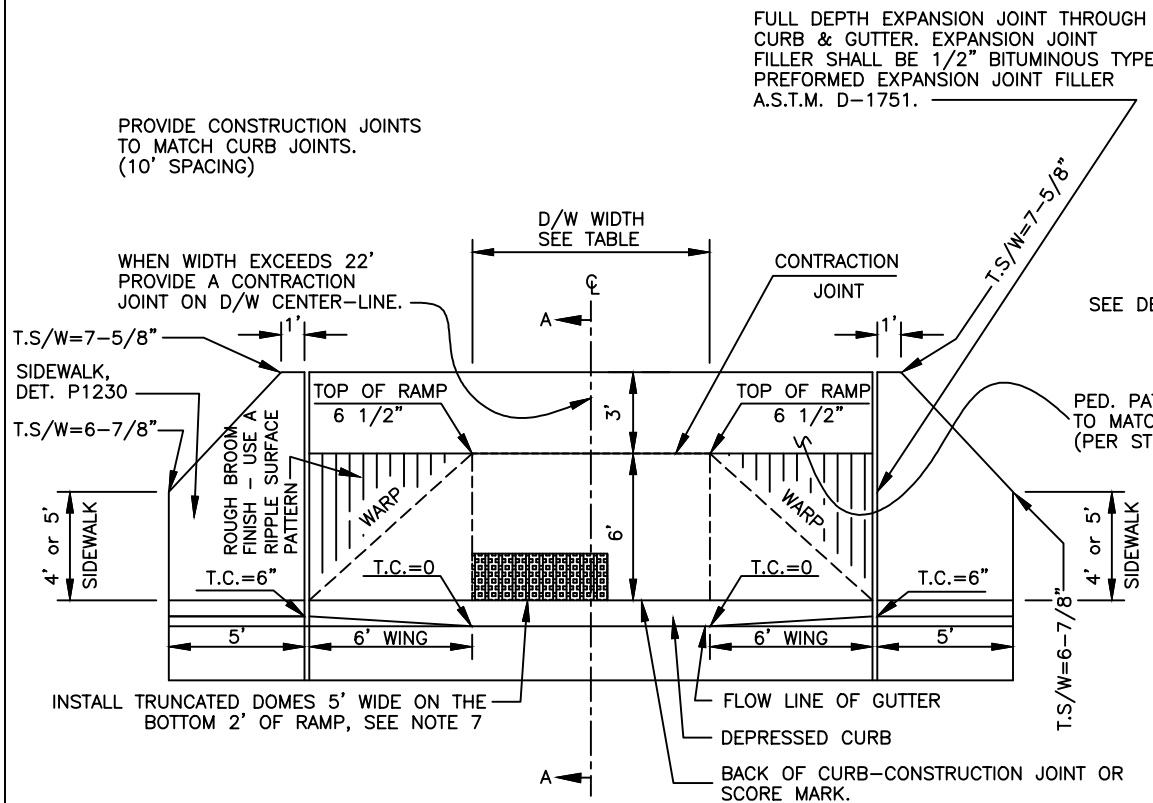

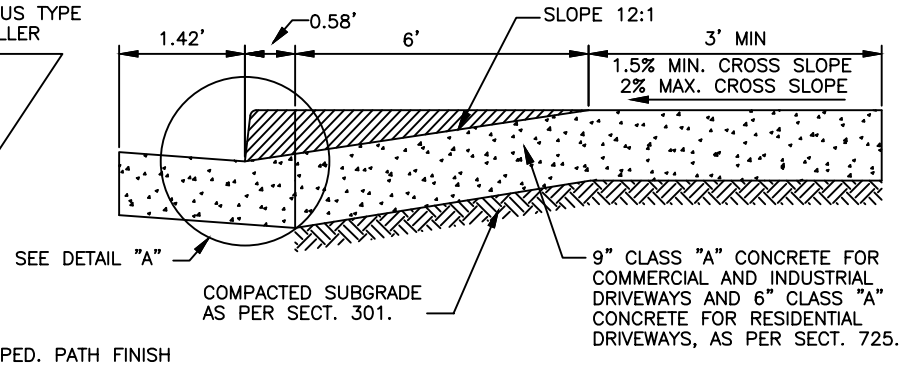

SECTION A-A

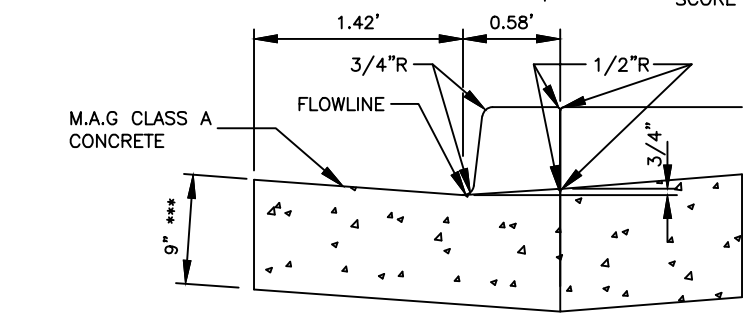

DETAIL "A"

NOTES:

1. THIS DETAIL IS ONLY TO BE USED WHEN APPROVED BY THE CITY.
2. DEPRESSED CURB SHALL BE PAID FOR AS COMBINED CURB AND GUTTER.
3. CONCRETE CURB & GUTTER SHALL BE M.A.G. CLASS A; TOP OF WING TO TOP OF WING.
4. PAYMENT FOR DRIVEWAY SHALL BE ON A SQUARE FOOT BASIS.
5. EXPANSION JOINT MATERIAL SHALL BE SECURED IN PLACE PRIOR TO POURING CONCRETE AND SHALL COMPLETELY SEPARATE THE DRIVEWAY SLAB FROM THE SIDEWALK, EXTENDING FROM THE SURFACE TO THE SUBGRADE.
6. CONTROL ELEVATIONS SHOWN ARE IN RELATION TO GUTTER. GUTTER ELEVATION = 0
7. TRUNCATED DOMES SHALL BE INSTALLED AT THE BACK OF CURB IN A 2-FT DEEP BY 5-FT WIDE AREA LOCATED AT EITHER THE RIGHT OR LEFT END OF THE DRIVEWAY ENTRANCE, WHICHEVER WILL PROVIDE THE MOST DIRECT ALIGNMENT WITH THE RECEIVER CURB RAMP ON THE OPPOSITE CURB. TRUNCATED DOMES TO BE IN ACCORDANCE WITH DETAIL P1232.

Refer to P1255-4 for Driveway Widths Policy

DETAIL NO.	City of Phoenix STANDARD DETAIL	DRIVEWAY - PEDESTRIAN RAMP COMBINATION (FOR USE AT T TYPE INTERSECTIONS)	APPROVED ACTING CITY ENGINEER 7/31/08 DATE	DETAIL NO.
P1244				P1244

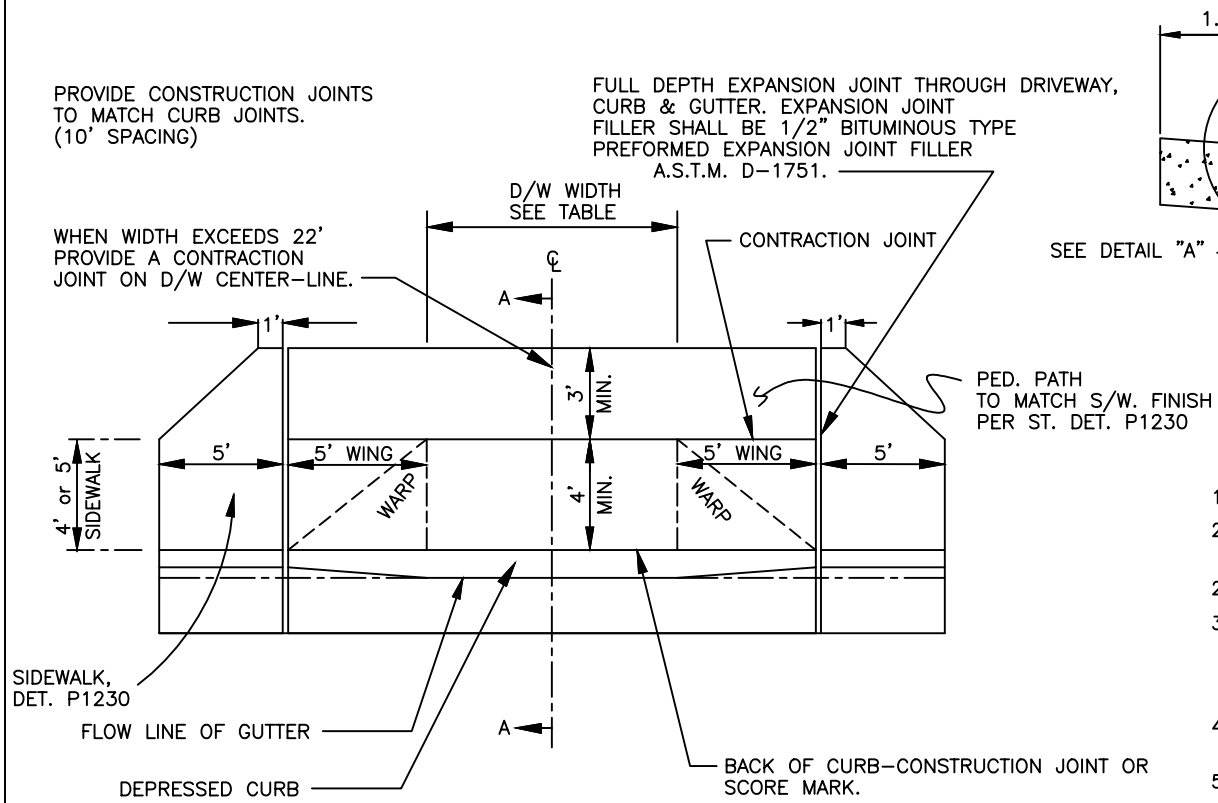

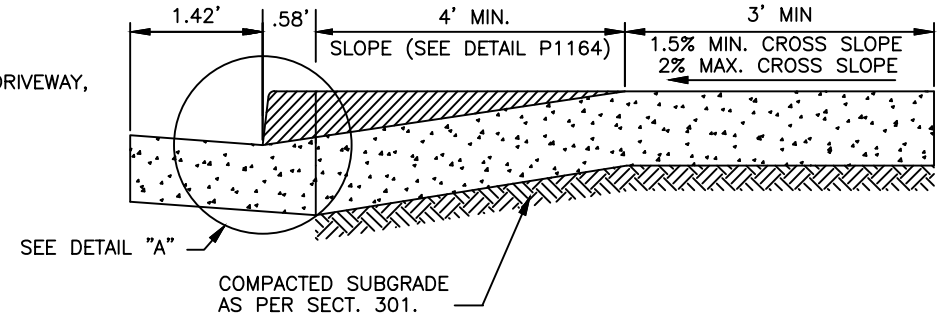

SECTION A-A

NOTES

1. DEPRESSED CURB SHALL BE PAID FOR AS COMBINED CURB AND GUTTER.
2. CONCRETE CURB & GUTTER SHALL BE M.A.G. CLASS A; TOP OF WING TO TOP OF WING.
2. PAYMENT FOR DRIVEWAY SHALL BE ON A SQUARE FOOT BASIS.
3. EXPANSION JOINT MATERIAL SHALL BE SECURED IN PLACE PRIOR TO POURING CONCRETE AND SHALL COMPLETELY SEPARATE THE DRIVEWAY SLAB FROM THE SIDEWALK, EXTENDING FROM THE SURFACE TO THE SUBGRADE.
4. WHEN DRIVEWAY IS CONSTRUCTED AT A "T" INTERSECTION AND IS USED AS A RAMP, USE DETAIL P1244.
5. 9" CLASS "A" CONCRETE FOR COMMERCIAL AND INDUSTRIAL DRIVEWAYS AND 6" CLASS "A" CONCRETE FOR RESIDENTIAL DRIVEWAYS, AS PER SECT. 725.

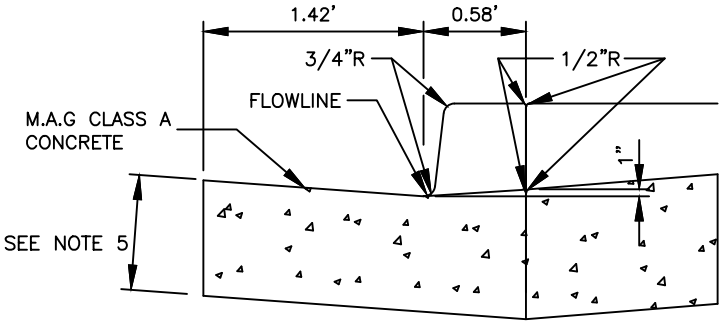

DETAIL "A"

Refer to P1255-4 for Driveway Widths Policy

DETAIL NO.	City of Phoenix STANDARD DETAIL	DRIVEWAY ENTRANCE - TYPE I (SIDEWALK ADJACENT TO CURB)	APPROVED ACTING CITY ENGINEER 7/31/08 DATE	DETAIL NO.
P1255-1				P1255-1

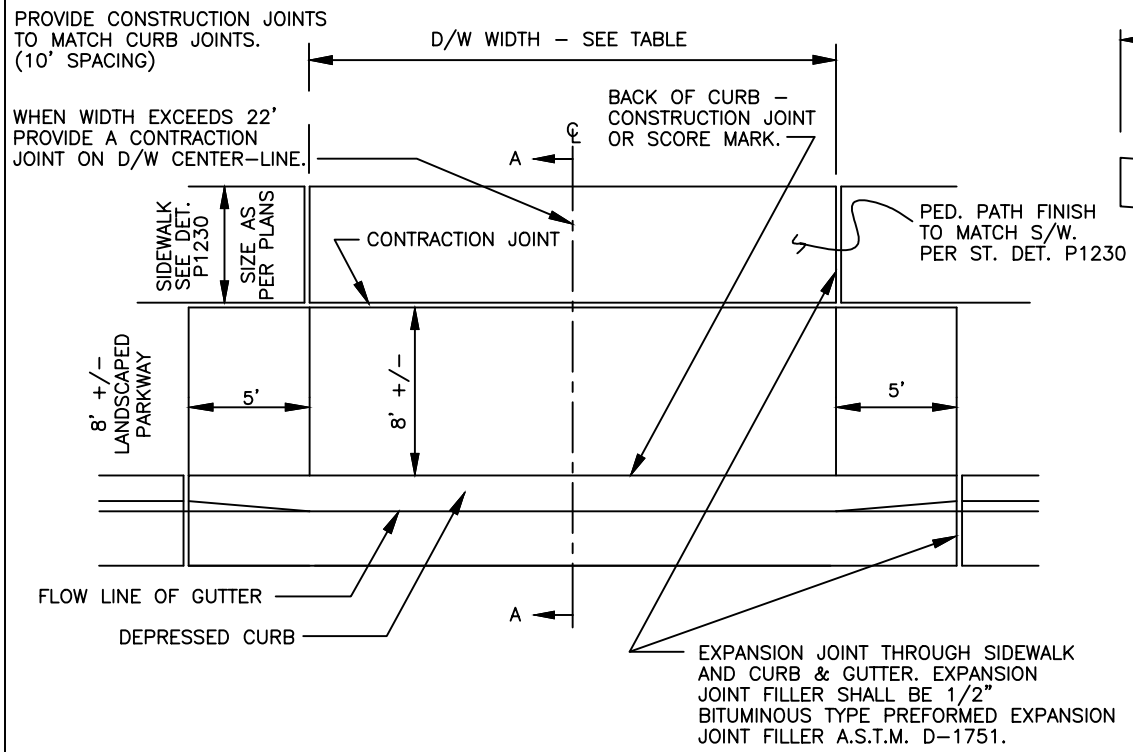

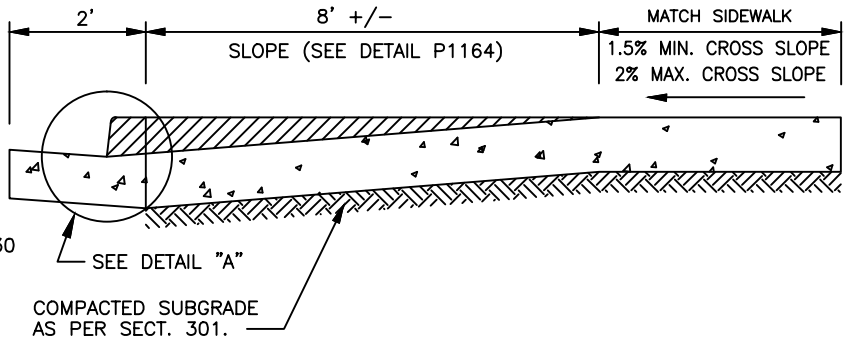

SECTION A–A

NOTES

1. DEPRESSED CURB SHALL BE PAID FOR AS COMBINED CURB AND GUTTER.
2. CONCRETE CURB & GUTTER SHALL BE M.A.G. CLASS A; TOP OF WING TO TOP OF WING.
3. PAYMENT FOR DRIVEWAY SHALL BE ON A SQUARE FOOT BASIS.
4. EXPANSION JOINT MATERIAL SHALL BE SECURED IN PLACE PRIOR TO POURING CONCRETE AND SHALL COMPLETELY SEPARATE THE DRIVEWAY SLAB FROM THE SIDEWALK, EXTENDING FROM THE SURFACE TO THE SUBGRADE.
5. WHEN DRIVEWAY IS CONSTRUCTED AT A "T" INTERSECTION AND IS USED AS A RAMP, THE SLOPE OF THE DRIVEWAY SHALL BE A MAX OF 12:1, AND WILL HAVE TRUNCATED DOMES INSTALLED AT THE BACK OF CURB IN A 2–FT DEEP BY 5–FT WIDE AREA LOCATED AT EITHER THE RIGHT OR LEFT END OF THE DRIVEWAY ENTRANCE, WHICHEVER WILL PROVIDE THE MOST DIRECT ALIGNMENT WITH THE RECEIVER CURB RAMP ON THE OPPOSITE CURB. TRUNCATED DOMES TO BE IN ACCORDANCE WITH DETAIL P1232.
6. 9" CLASS "A" CONCRETE FOR COMMERCIAL AND INDUSTRIAL DRIVEWAYS AND 6" CLASS "A" CONCRETE FOR RESIDENTIAL DRIVEWAYS, AS PER SECT. 725.

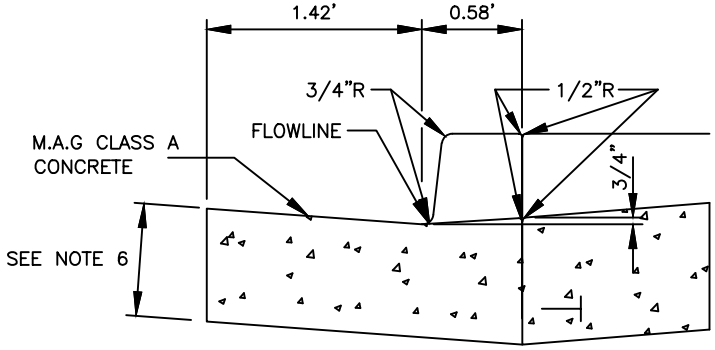

DETAIL "A"

Refer to P1255–4 for Driveway Widths Policy

DETAIL NO.	City of Phoenix STANDARD DETAIL	DRIVEWAY ENTRANCE – TYPE II (DETACHED SIDEWALK)	APPROVED ACTING CITY ENGINEER 7/31/08 DATE	DETAIL NO.
P1255–2				P1255–2

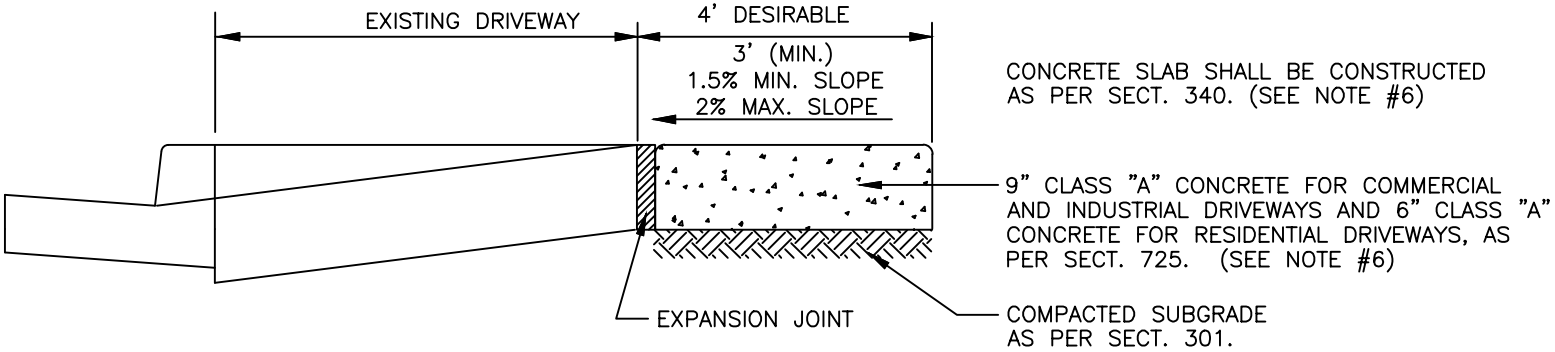

SECTION A–A

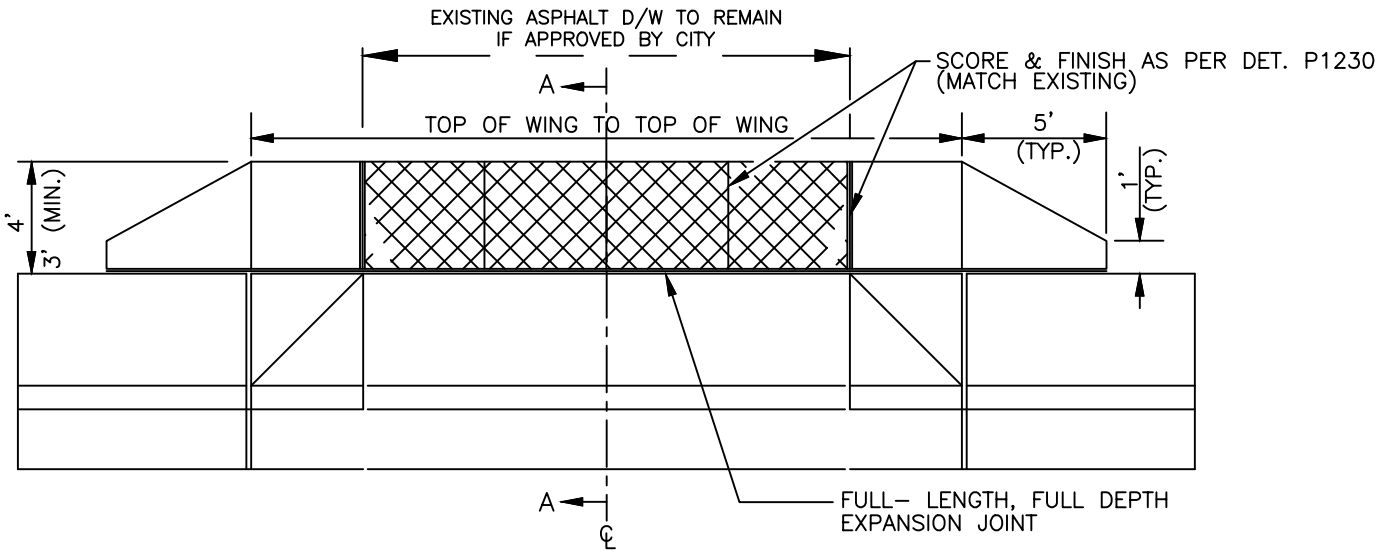

NOTES

1. EXPANSION JOINT FILLER SHALL BE 1/2" BITUMINOUS TYPE PREFORMED EXPANSION JOINT FILLER, A.S.T.M. D–1751.
2. CONTROL & EXPANSION JOINTS SHALL ALIGN WITH EXISTING JOINTS IN DRIVEWAY.
3. CONCRETE SHALL BE CLASS "A", SECT. 725.
4. EXPANSION JOINT MATERIAL SHALL BE SECURED IN PLACE PRIOR TO POURING CONCRETE AND SHALL COMPLETELY SEPARATE THE DRIVEWAY SLAB FROM THE SIDEWALK, EXTENDING FROM THE SURFACE TO THE SUBGRADE.
5. EXPANSION JOINT MATERIAL SHALL BE USED WHEN NEW POURING IS ADJACENT TO EXISTING DRIVEWAY AREA.
6. INDICATES AREA WHICH MAY REMAIN ASPHALT IF THE CROSS SLOPE & PAVING CONDITIONS MEET ADA STANDARDS.

DETAIL NO.	City of Phoenix STANDARD DETAIL	DRIVEWAY ENTRANCE – ADA RETROFIT	APPROVED Mario Sadamando CITY ENGINEER 8/8/03 DATE	DETAIL NO.
P1255–3				P1255–3

DRIVEWAY WIDTHS POLICY

	TYPE OF DEVELOPMENT					
STREET CLASSIFICATION	SINGLE FAMILY	MutliFamily/Commercial <30 spaces	MutliFamily/Commercial >30 spaces	GAS STATION	TRUCK FACILITIES	GATES
ALLEY	16' MINIMUM	20'	20'			
LOCAL RESIDENTIAL	12' ONE CAR 16' ONE CAR – RECOMMENDED	24' – 30'	30'			**
LOCAL COMMERCIAL/INDUSTRIAL		30' – 40' ***	30' – 40' ***	40' ***	40' – 50' ***	**
COLLECTOR RESIDENTIAL	16' MINIMUM	30' ***	30' ***	40' ***		**
COLLECTOR COMMERCIAL/INDUSTRIAL		30' – 40' ***	30' – 50' ***	40' – 50' ***	40' – 50' ***	**
ARTERIAL	DISCOURAGED EXCEPT FOR LARGE LOT–CIRCULAR DRIVES *	30' ***	40' ***	40' – 50' ***	40' – 50' ***	**

* MINIMUM 82' PROPERTY WIDTH
** SEE GATE ACCESS TURNAROUND HANDOUT – DSD
*** MEDIAN –30' MAXIMUM UNLESS THERE IS SIGNIFICANT TRUCK ACCESS – THEN 40'

Local/Collector One Way		Arterial One Way	
In	Out	In	Out
24'	16'	24'	20'

NOTES:
1) DRIVEWAYS GREATER THAN 50' ARE NOT PERMITTED BY CITY CODE UNLESS A WAIVER OF THE ORDINANCE IS OBTAINED FROM THE DRIVEWAY HEARING OFFICER OR HIS DESIGNEE.
2) DEVIATION FROM THIS POLICY CAN BE DETERMINED BY THE CITY OF PHOENIX TRAFFIC ENGINEER.

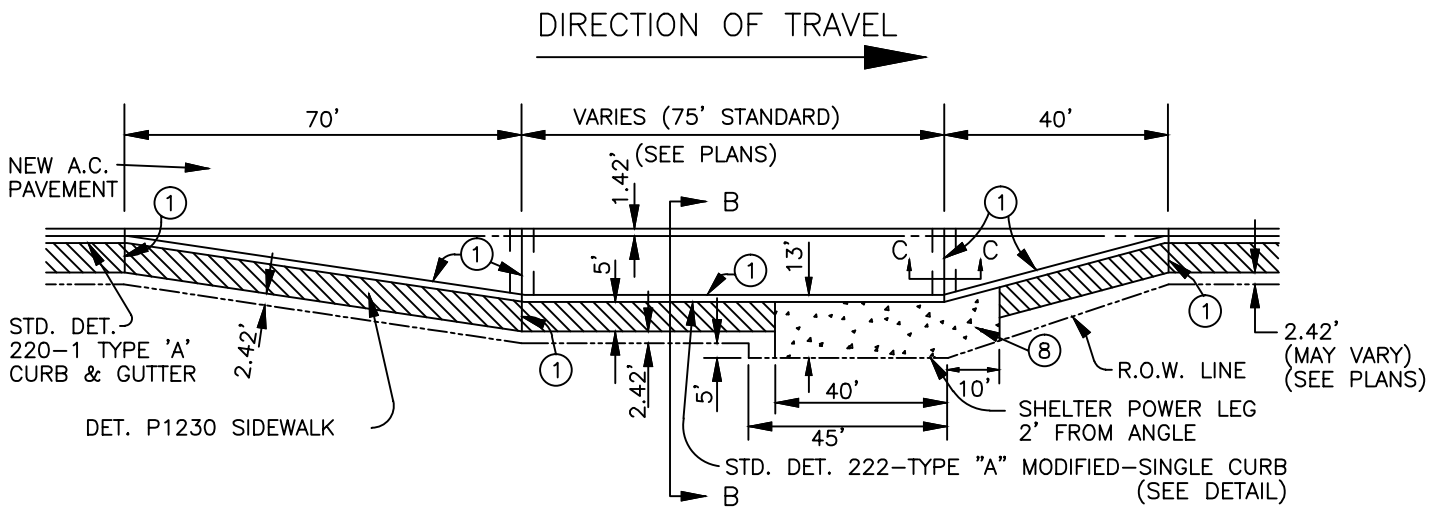

PLAN VIEW

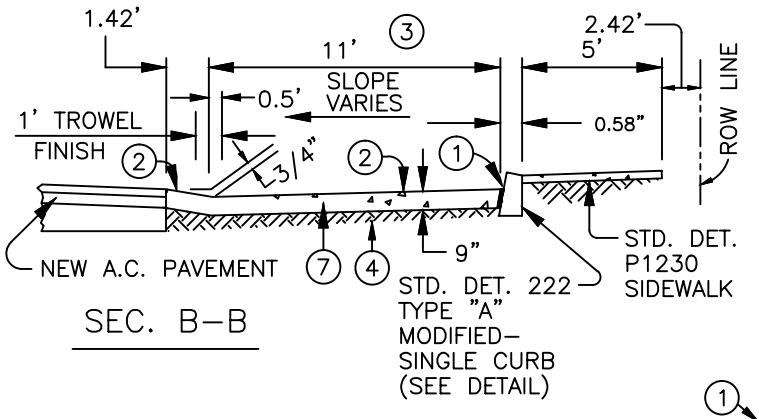

SEC. B-B

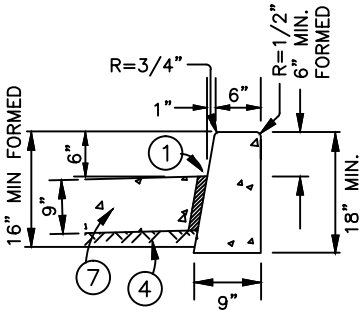

STD. DET. 222-TYPE "A" MOD. SINGLE CURB

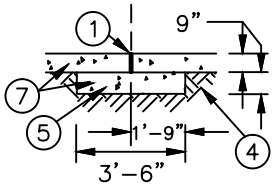

SEC. C-C

NOTES:

1. 1/2" BITUMINOUS PREFORMED EXPANSION JOINT FILLER, A.S.T.M. D-1751
2. CONCRETE BUS BAY PAVEMENT SHALL BE BROOM FINISHED, EXCEPT WHERE OTHERWISE NOTED.
3. MAY BE REDUCED TO 10' MINIMUM IF APPROVED BY CITY.
4. SUBGRADE PREPARATION PER SPECIFICATIONS.
5. CONCRETE PAD TO BE POURED SEPARATELY FROM CONCRETE BUS BAY PAVEMENT. (SEE SECTION C-C)
6. CONTRACTION JOINTS IN THE BUS BAY PAVEMENT SHALL MATCH THOSE IN THE CURB.
7. CONCRETE SHALL BE CLASS "A" PER M.A.G. SPECS. OR CLASS "S", F'C = 3000 PSI PER A.D.O.T. SPECS.
8. BUS SHELTER PAD, SEE DETAIL P1261
9. DRIVEWAYS SHALL NOT BE LOCATED WITHIN THE SHELTER PAD AREA.
10. CAN BE USED AT INTERSECTIONS WITH TOTAL ROADWAY WIDTHS OF 74' OR LARGER.

DETAIL NO.	City of Phoenix STANDARD DETAIL	BUS BAY (TYPE 1)	APPROVED ACTING CITY ENGINEER 7/31/08 DATE	DETAIL NO.
P1256-1				P1256-1

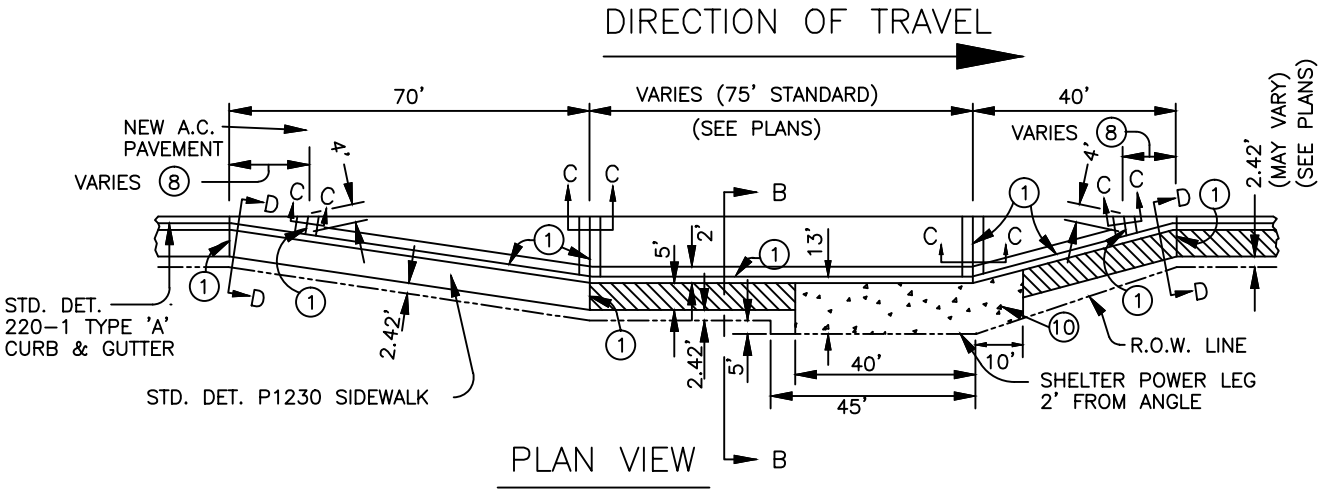

PLAN VIEW

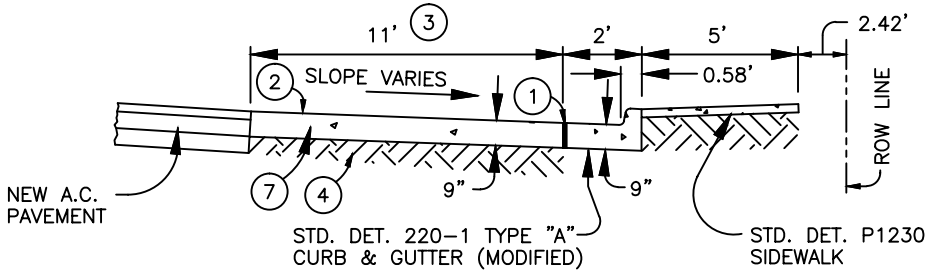

SEC. B – B

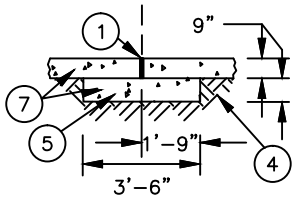

SEC. C – C

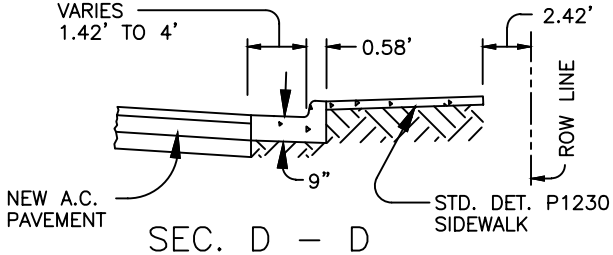

SEC. D – D

NOTES:

1. 1/2" BITUMINOUS PREFORMED EXPANSION JOINT FILLER, A.S.T.M. D-1751
2. CONCRETE BUS BAY PAVEMENT SHALL BE BROOM FINISHED.
3. MAY BE REDUCED TO 10' MINIMUM IF APPROVED BY CITY.
4. SUBGRADE PREPARATION PER SPECIFICATIONS.
5. CONCRETE PAD TO BE POURED SEPARATELY FROM CONCRETE BUS BAY PAVEMENT. (SEE SECTION C-C)
6. CONTRACTION JOINTS IN THE BUS BAY PAVEMENT SHALL MATCH THOSE IN THE CURB.
7. CONCRETE SHALL BE CLASS "A" PER M.A.G. SPECS. OR CLASS "S", F'C = 3000 PSI PER A.D.O.T SPECS.
8. CURB & GUTTER-TO-BUS BAY PAVEMENT-TRANSITION (LENGTH VARIES)
9. DRIVEWAYS SHALL NOT BE LOCATED WITHIN THE SHELTER PAD AREA.
10. BUS SHELTER PAD, SEE DETAIL P1261
11. CAN BE USED AT INTERSECTIONS WITH TOTAL ROADWAY WIDTHS OF 74' OR LARGER.

DETAIL NO.	City of Phoenix STANDARD DETAIL	BUS BAY (TYPE 2)	APPROVED ACTING CITY ENGINEER 7/31/08 DATE	DETAIL NO.
P1256-2				P1256-2

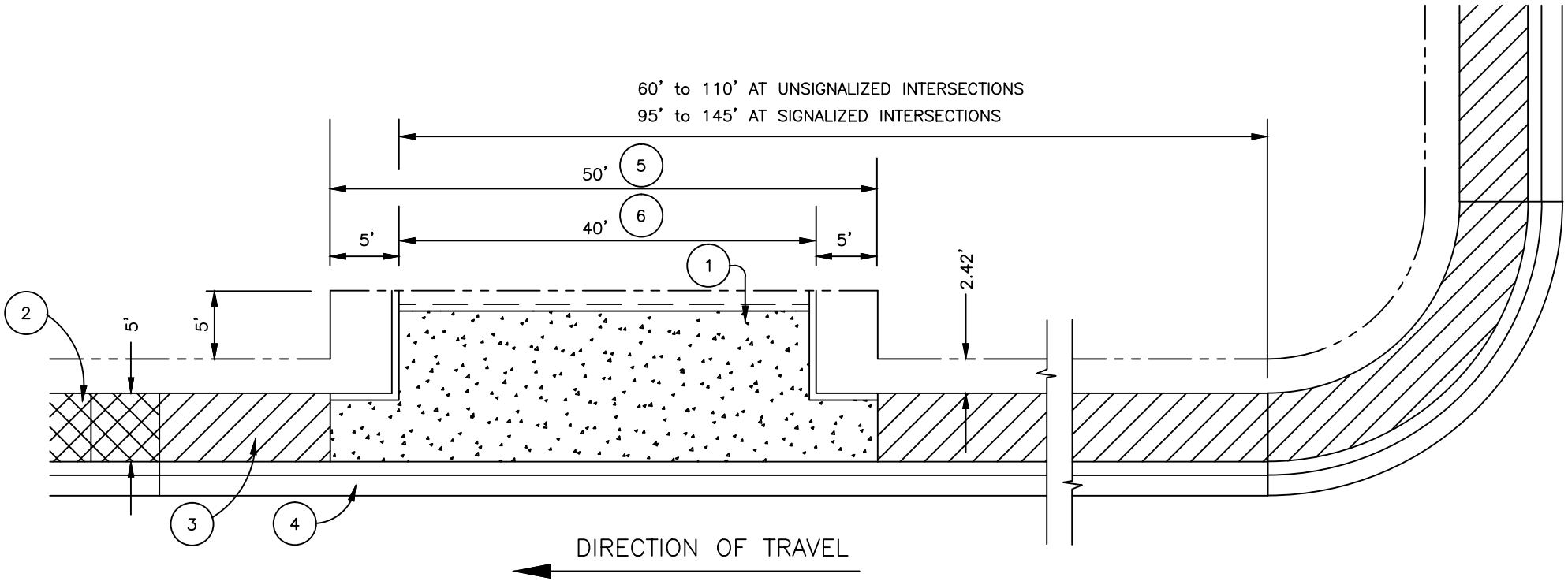

1. BUS SHELTER PAD. SEE DETAIL P1260 OR P1262
2. DRIVEWAYS SHALL NOT BE LOCATED WITHIN THE SHELTER PAD AREA.
3. SIDEWALK DETAIL P1230
4. CURB & GUTTER DETAIL 220–1 TYPE "A".
5. REDUCE TO 30' IN SINGLE FAMILY RESIDENTIAL AREAS.
6. REDUCE TO 20' IN SINGLE–FAMILY RESIDENTIAL AREAS.

DETAIL NO.	City of Phoenix STANDARD DETAIL	BUS SHELTER PAD LOCATION (BUS STOP)	APPROVED ACTING CITY ENGINEER 7/31/08 DATE	DETAIL NO.
P1258				P1258

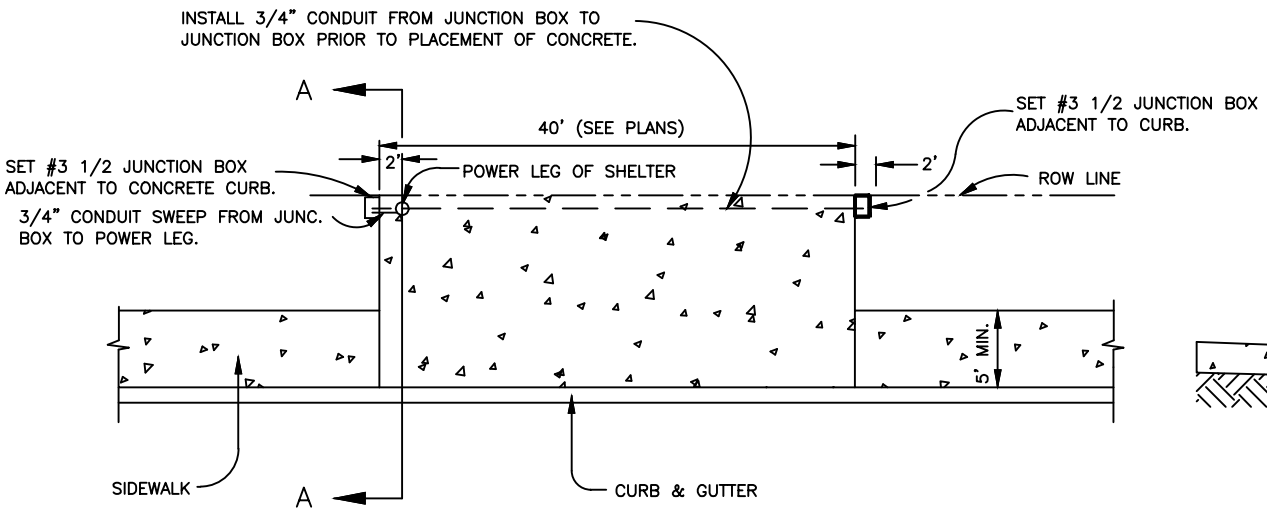

PLAN VIEW

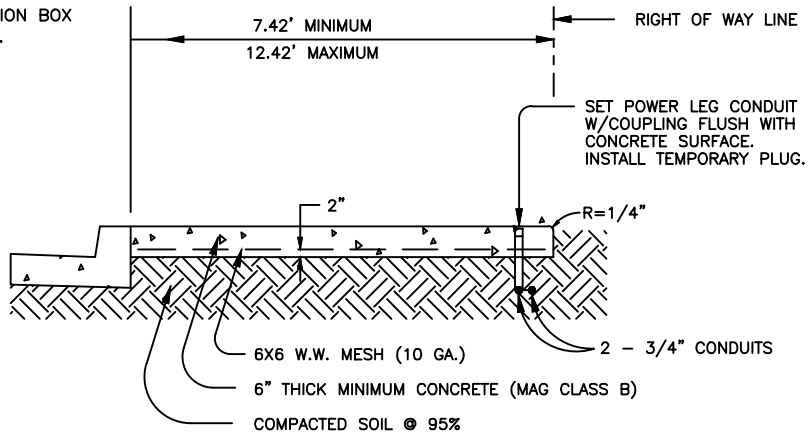

SECTION A – A

NOTES:

1. ACTUAL PLAN LAYOUT MAY VARY. ALL OTHER DETAIL INFORMATION REMAINS THE SAME. SEE PLANS FOR SPECIFIC LOCATIONS AND DIMENSIONS OF BUS SHELTER PAD.
2. ANY SHELTER OR BUS STOP FURNITURE PLACEMENT SHALL BE LOCATED TO PROVIDE A MIN. 5 ft. WIDE CLEAR SIDEWALK.
3. DECORATIVE PAVEMENT OPTIONS MAY INCLUDE EXPOSED AGGREGATE 1/4" (NO LARGER) WITH DESIGN STRENGTH OF 4000 PSI MINIMUM. OTHER OPTIONS INCLUDING COLOR (TO MATCH SURROUNDINGS) AND STAMPING WILL BE CONSIDERED. CONCRETE MIX DESIGN THROUGH THE CITY OF PHOENIX MATERIALS LAB. DECORATIVE OPTIONS TO BE APPROVED BY THE CITY OF PHOENIX. PAVERS ARE NOT TO BE USED.
4. ELECTRICAL CONDUITS AND JUNCTION BOXES SHALL NOT BE REQUIRED UNLESS REQUESTED.
5. ALL CONDUIT SHALL BE P.V.C. SCHEDULE 40, U.L. LISTED.
6. ALL COSTS ASSOCIATED WITH ELECTRICAL AND RELATED ITEMS SHOWN ON THESE DETAILS (CONDUITS, JUNCTION BOXES, GROUND ROD, ETC.) SHALL BE CONSIDERED INCLUDED IN THE COST OF THE PAY ITEM FOR CONCRETE BUS SHELTER PAD.
7. BUS BAY PAVEMENT, CONCRETE PAD, CONCRETE CURB, SINGLE CURB, CURB & GUTTER, SIDEWALKS, & DRIVEWAYS ARE SEPARATE PAY ITEMS.
8. SHELTER PADS AND DRIVEWAYS SHALL BE LOCATED TO PROVIDE MINIMUM INTERSECTION SIGHT DISTANCE IN ACCORDANCE WITH CURRENT AASHTO STANDARDS (CASE IIIA).

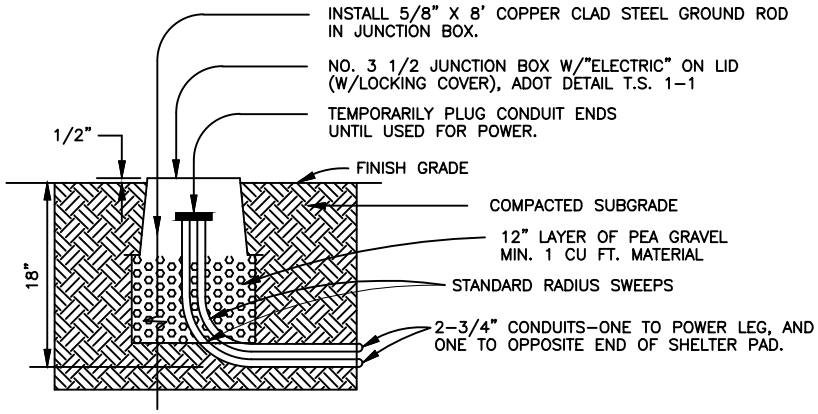

SLEEVE SWEEP & JUNCTION BOX DETAIL

DETAIL NO.	City of Phoenix STANDARD DETAIL	BUS SHELTER/ACCESSORY PAD BUS STOP	APPROVED ACTING CITY ENGINEER 7/31/08 DATE	DETAIL NO.
P1260				P1260

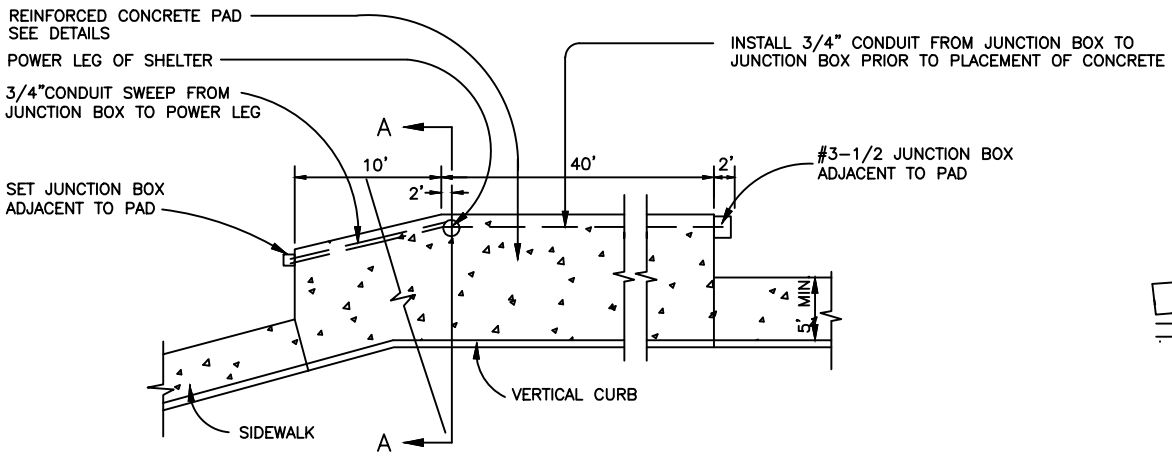

PLAN VIEW

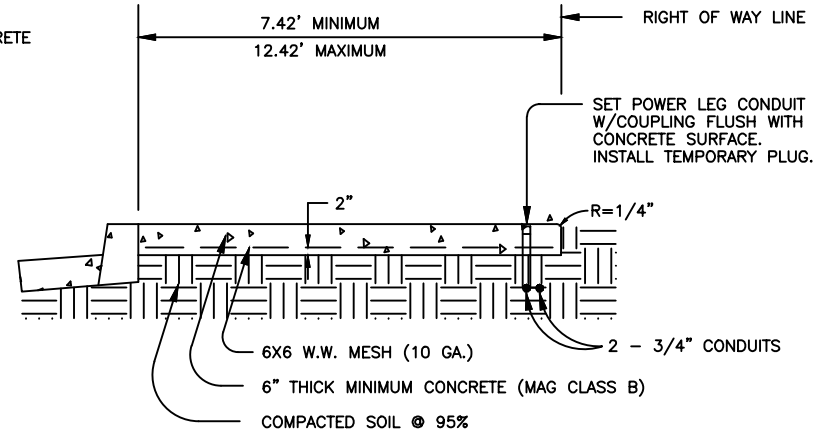

SECTION A – A

NOTES:

1. ACTUAL PLAN LAYOUT MAY VARY. ALL OTHER DETAIL INFORMATION REMAINS THE SAME. SEE PLANS FOR SPECIFIC LOCATIONS AND DIMENSIONS OF BUS SHELTER PAD.
2. ANY SHELTER OR BUS STOP FURNITURE PLACEMENT SHALL BE LOCATED TO PROVIDE A MIN. 5 ft. WIDE CLEAR SIDEWALK.
3. DECORATIVE PAVEMENT OPTIONS MAY INCLUDE EXPOSED AGGREGATE 1/4" (NO LARGER) WITH DESIGN STRENGTH OF 4000 PSI MINIMUM. OTHER OPTIONS INCLUDING COLOR (TO MATCH SURROUNDINGS) AND STAMPING WILL BE CONSIDERED. CONCRETE MIX DESIGN THROUGH THE CITY OF PHOENIX MATERIALS LAB. DECORATIVE OPTIONS TO BE APPROVED BY THE CITY OF PHOENIX. PAVERS ARE NOT TO BE USED.
4. ELECTRICAL CONDUITS AND JUNCTION BOXES SHALL NOT BE REQUIRED UNLESS REQUESTED.
5. ALL CONDUIT SHALL BE P.V.C. SCHEDULE 40, U.L. LISTED.
6. ALL COSTS ASSOCIATED WITH ELECTRICAL AND RELATED ITEMS SHOWN ON THESE DETAILS (CONDUITS, JUNCTION BOXES, GROUND ROD, ETC.) SHALL BE CONSIDERED INCLUDED IN THE COST OF THE PAY ITEM FOR CONCRETE BUS SHELTER PAD.
7. BUS BAY PAVEMENT, CONCRETE PAD, CONCRETE CURB, SINGLE CURB, CURB & GUTTER, SIDEWALKS, & DRIVEWAYS ARE SEPARATE PAY ITEMS.
8. SHELTER PADS AND DRIVEWAYS SHALL BE LOCATED TO PROVIDE MINIMUM INTERSECTION SIGHT DISTANCE IN ACCORDANCE WITH CURRENT AASHTO STANDARDS (CASE IIIA).

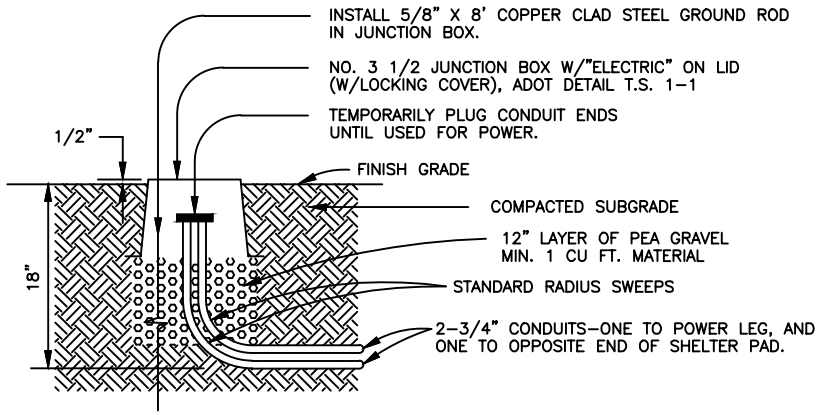

SLEEVE SWEEP & JUNCTION BOX DETAIL

DETAIL NO.	City of Phoenix STANDARD DETAIL	BUS SHELTER/ACCESSORY PAD BUS BAY	APPROVED ACTING CITY ENGINEER 7/31/08 DATE	DETAIL NO.
P1261				P1261

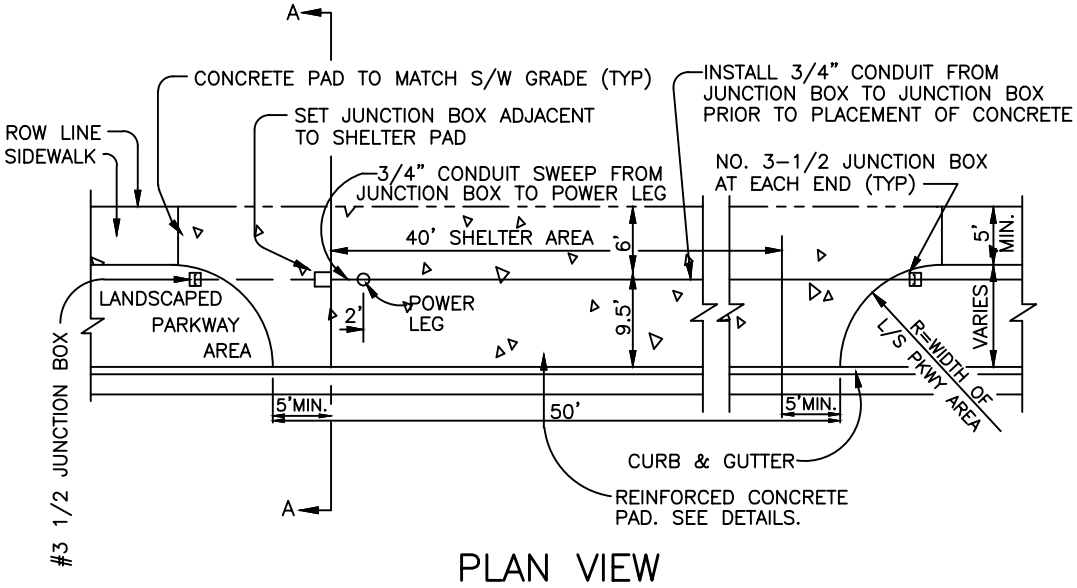

PLAN VIEW

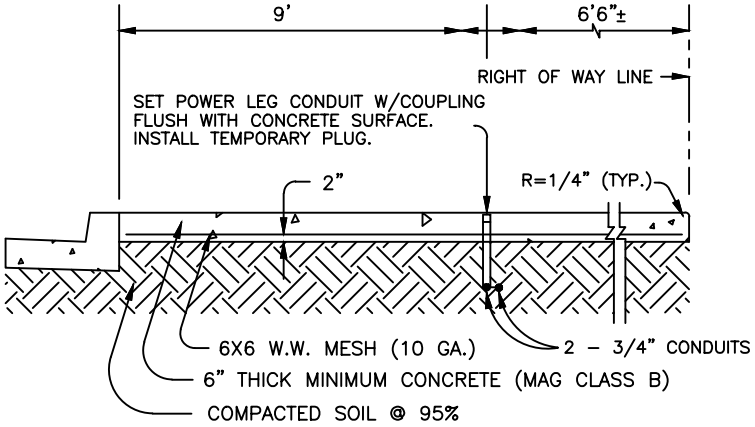

SECTION A – A

NOTES:

1. ACTUAL PLAN LAYOUT MAY VARY. ALL OTHER DETAIL INFORMATION REMAINS THE SAME. SEE PLANS FOR SPECIFIC LOCATIONS AND DIMENSIONS OF BUS SHELTER PAD.
2. ANY SHELTER OR BUS STOP FURNITURE PLACEMENT SHALL BE LOCATED TO PROVIDE A MIN. 5 ft. WIDE CLEAR SIDEWALK.
3. DECORATIVE PAVEMENT OPTIONS MAY INCLUDE EXPOSED AGGREGATE 1/4" (NO LARGER) WITH DESIGN STRENGTH OF 4000 PSI MINIMUM. OTHER OPTIONS INCLUDING COLOR (TO MATCH SURROUNDINGS) AND STAMPING WILL BE CONSIDERED. CONCRETE MIX DESIGN THROUGH THE CITY OF PHOENIX MATERIALS LAB. DECORATIVE OPTIONS TO BE APPROVED BY THE CITY OF PHOENIX. PAVERS ARE NOT TO BE USED.
4. ELECTRICAL CONDUITS AND JUNCTION BOXES SHALL NOT BE REQUIRED UNLESS REQUESTED.
5. ALL CONDUIT SHALL BE P.V.C. SCHEDULE 40, U.L. LISTED.
6. ALL COSTS ASSOCIATED WITH ELECTRICAL AND RELATED ITEMS SHOWN ON THESE DETAILS (CONDUITS, JUNCTION BOXES, GROUND ROD, ETC.) SHALL BE CONSIDERED INCLUDED IN THE COST OF THE PAY ITEM FOR CONCRETE BUS SHELTER PAD.
7. BUS BAY PAVEMENT, CONCRETE PAD, CONCRETE CURB, SINGLE CURB, CURB & GUTTER, SIDEWALKS, & DRIVEWAYS ARE SEPARATE PAY ITEMS.
8. SHELTER PADS AND DRIVEWAYS SHALL BE LOCATED TO PROVIDE MINIMUM INTERSECTION SIGHT DISTANCE IN ACCORDANCE WITH CURRENT AASHTO STANDARDS (CASE IIIA).

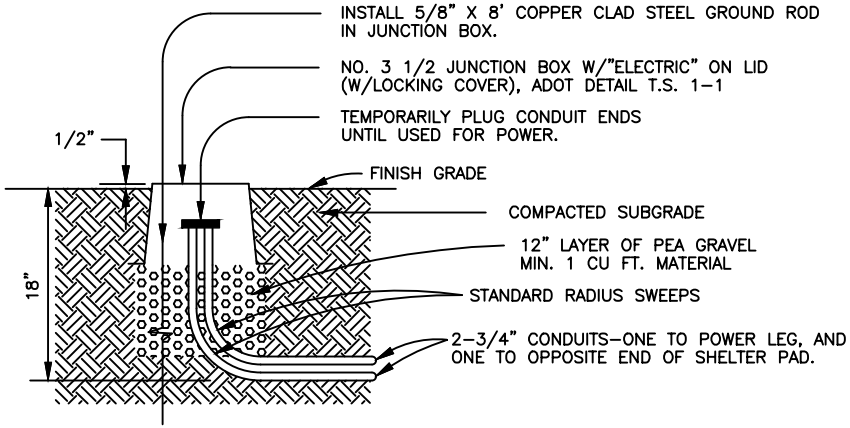

SLEEVE SWEEP & JUNCTION BOX DETAIL

DETAIL NO.	City of Phoenix STANDARD DETAIL	PARKWAY BUS SHELTER/ACCESSORY PAD	APPROVED ACTING CITY ENGINEER 7/31/08 DATE	DETAIL NO.
P1262				P1262

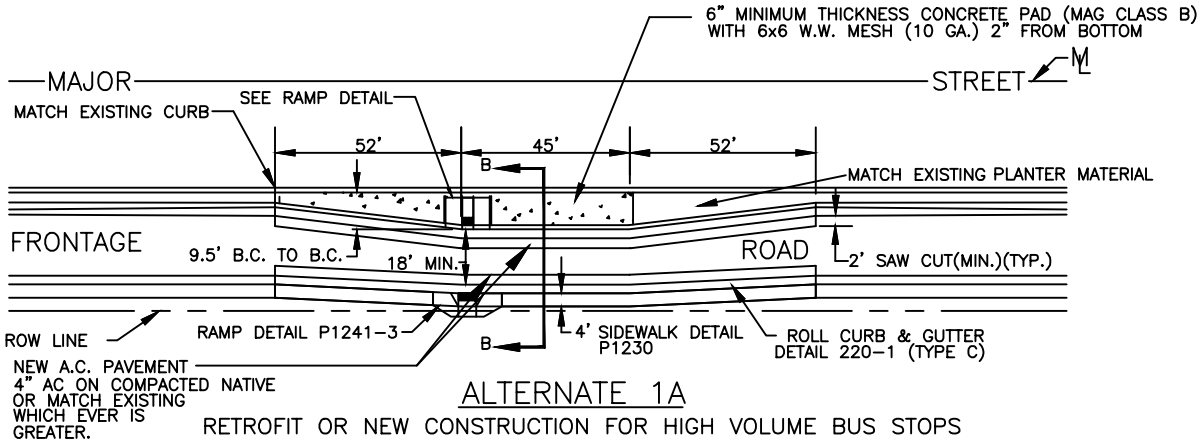

ALTERNATE 1A

RETROFIT OR NEW CONSTRUCTION FOR HIGH VOLUME BUS STOPS

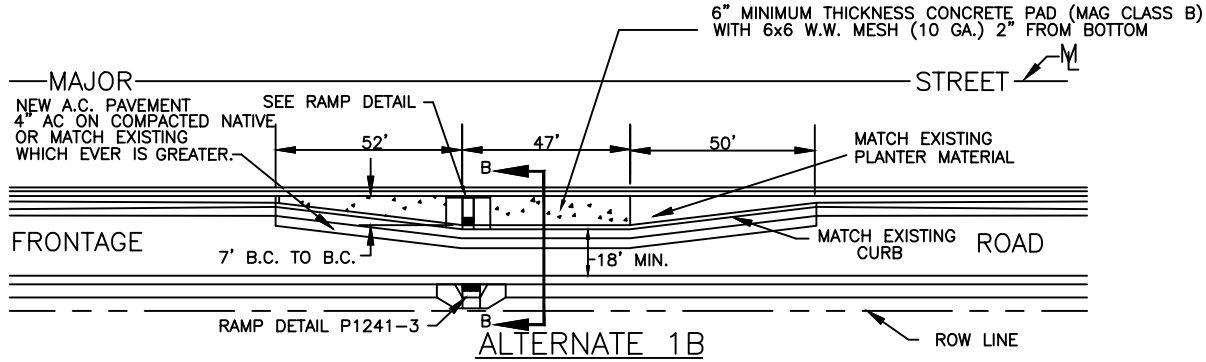

ALTERNATE 1B

RETROFIT OR NEW CONSTRUCTION FOR LOW VOLUME BUS STOPS.

NOTES:

1. ALL DIMENSIONS ARE TO FACE OF CURB.
2. WHEEL CHAIR RAMP AND WING SLOPES SHALL NOT EXCEED 12:1.
3. COORDINATE REMOVAL OF LANDSCAPING WITH STREET TRANSPORTATION DEPARTMENT'S LANDSCAPE ARCHITECT.
4. EXISTING LANDSCAPE IRRIGATION LINES SHALL BE SLEEVED UNDER BUS SHELTER/ACCESSORY PAD & DECO PAVEMENT. SLEEVE SHALL EXTEND 12" BEYOND EACH SIDE OF PAVEMENT.
5. NOTIFY PARKS DEPARTMENT MAINTENANCE DISTRICT IF LANDSCAPE IRRIGATION SYSTEM WILL BE INTERRUPTED FOR MORE THAN 24 HOURS.
6. ALL CONCRETE AND ASPHALT REMOVALS SHALL BE SAW CUT. MIN. 2' ASPHALT REPLACEMENT ADJACENT TO NEW CURBS.
7. DECORATIVE PAVEMENT OPTIONS MAY INCLUDE EXPOSED AGGREGATE 1/4" (NO LARGER) WITH DESIGN STRENGTH 4000 PSI. OTHER OPTIONS INCLUDING COLOR (TO MATCH SURROUNDINGS) AND STAMPING WILL BE CONSIDERED. CONCRETE MIX DESIGN THROUGH THE CITY OF PHOENIX MATERIALS LAB. DECORATIVE OPTIONS TO BE APPROVED BY THE CITY OF PHOENIX. PAVERS ARE NOT TO BE USED.

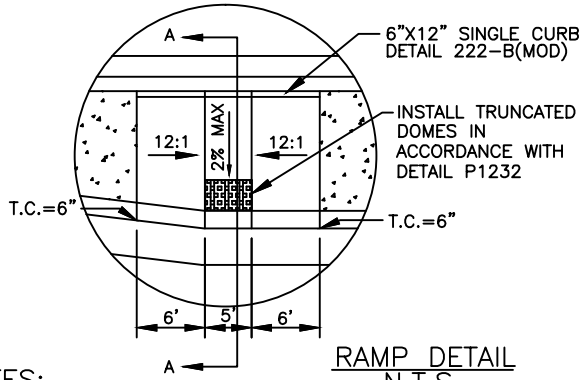

RAMP DETAIL
N.T.S.

NOTES:

1. USE CLASS 'B' CONCRETE PER SECTION 725.
2. CONTROL ELEVATIONS SHOWN ARE IN RELATION TO THE GUTTER. GUTTER ELEVATION = 0.

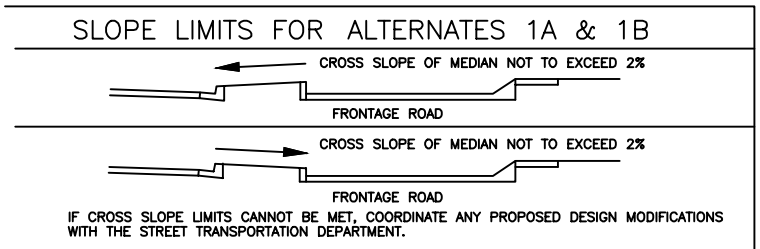

SECTION B-B

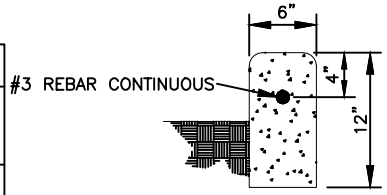

DETAIL 222-B(MOD)

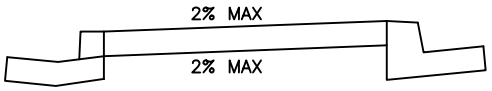

SECTION A-A

DETAIL NO.	City of Phoenix STANDARD DETAIL	BUS SHELTER/ACCESSORY PAD FRONTAGE ROAD MID-BLOCK	APPROVED ACTING CITY ENGINEER 7/31/08 DATE	DETAIL NO.
P1263-1				P1263-1

NOTES:

1. ALL DIMENSIONS ARE TO FACE OF CURB.
2. WHEEL CHAIR RAMP AND WING SLOPES SHALL NOT EXCEED 12:1.
3. COORDINATE REMOVAL OF LANDSCAPING WITH STREET TRANSPORTATION DEPARTMENT'S LANDSCAPE ARCHITECT.
4. EXISTING LANDSCAPE IRRIGATION LINES SHALL BE SLEEVED UNDER BUS SHELTER/ACCESSORY PAD. SLEEVE SHALL EXTEND 12" BEYOND EACH SIDE OF PAD.
5. NOTIFY PARKS DEPARTMENT MAINTENANCE DISTRICT IF LANDSCAPE IRRIGATION SYSTEM WILL BE INTERRUPTED FOR MORE THAN 24 HOURS.
6. ALL CONCRETE AND ASPHALT REMOVALS SHALL BE SAW CUT. MIN. 2' ASPHALT REPLACEMENT ADJACENT TO NEW CURBS.
7. SEE DETAIL P1263-1 FOR CROSS SLOPE LIMITS.
8. DECORATIVE PAVEMENT OPTIONS MAY INCLUDE EXPOSED AGGREGATE 1/4" (NO LARGER) WITH DESIGN STRENGTH OF 4000 PSI MINIMUM. OTHER OPTIONS INCLUDING COLOR (TO MATCH SURROUNDINGS) AND STAMPING WILL BE CONSIDERED. CONCRETE MIX DESIGN THROUGH THE CITY OF PHOENIX MATERIALS LAB. DECORATIVE OPTIONS TO BE APPROVED BY THE CITY OF PHOENIX. PAVERS ARE NOT TO BE USED.

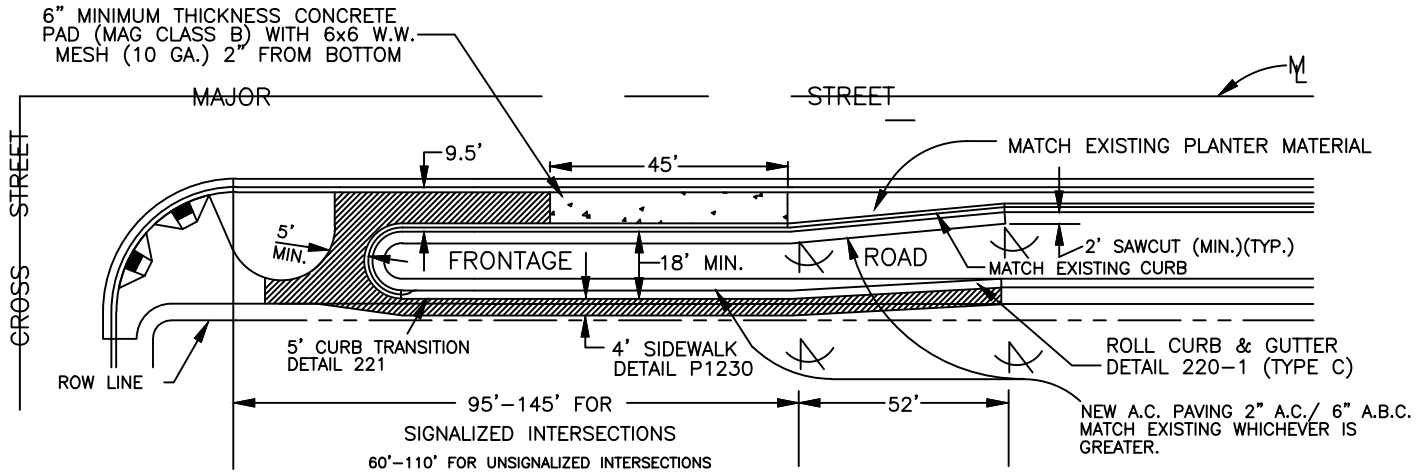

ALTERNATE 2A

NEW CONSTRUCTION FOR HIGH VOLUME BUS STOPS

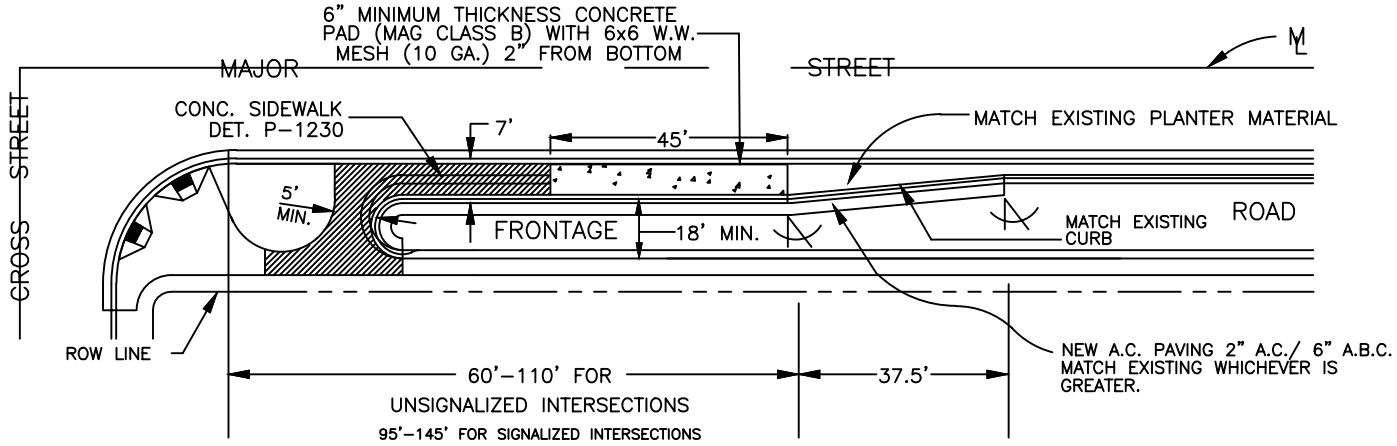

ALTERNATE 2B

RETROFIT OR NEW CONSTRUCTION FOR LOW VOLUME BUS STOPS.

DETAIL NO.	City of Phoenix STANDARD DETAIL	PARKWAY BUS SHELTER/ACCESSORY PAD	APPROVED ACTING CITY ENGINEER 7/31/08 DATE	DETAIL NO.
P1263-2				P1263-2

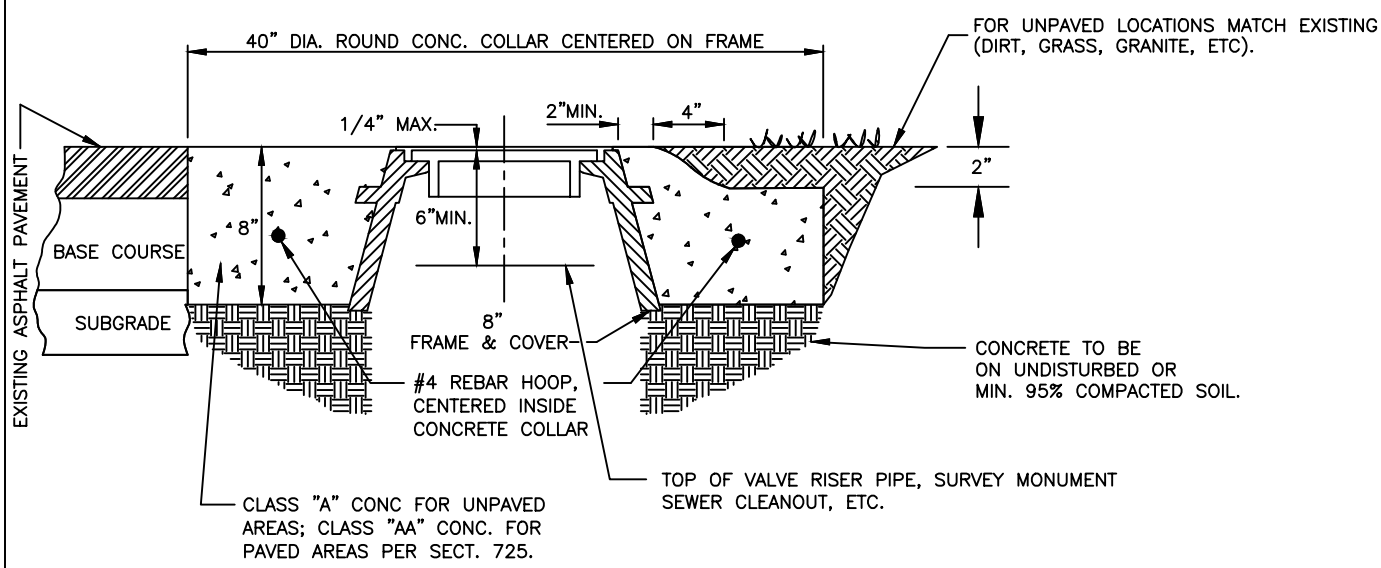

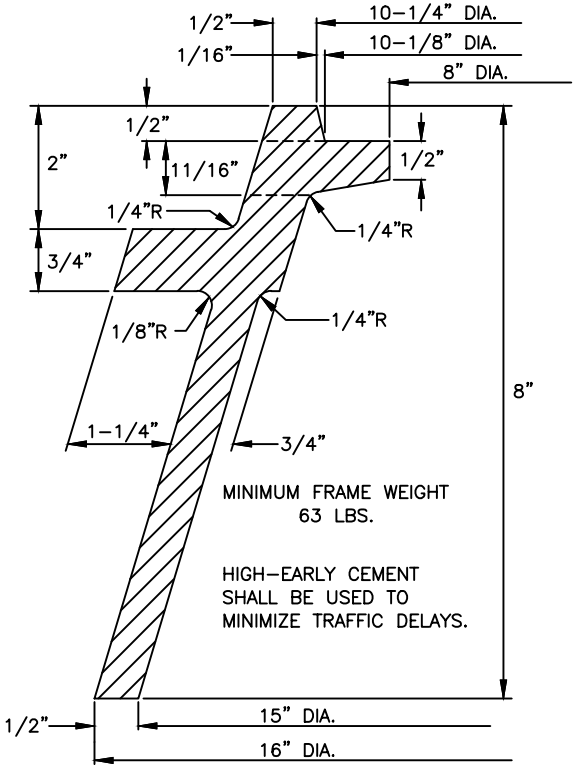

8" C.I. FRAME AND COVER

1) IN PAVED MAJOR ARTERIAL STREETS, CONCRETE COLLARS SHALL BE SCORED RADIALLY AT QUARTER-CIRCLE POINTS AND SCORES SHALL BE 1/4" WIDE BY 1/2" DEEP. CONCRETE SURFACE SHALL BE ROUGH BROOM FINISHED. NO TRAFFIC SHALL BE ALLOWED ON COLLARS UNTIL CONCRETE REACHES MINIMUM 2500 PSI ON ALL STREETS.

2) LETTERS ON COVER TO BE AS FOLLOWS: "SEWER", "WATER", OR "SURVEY" AS DIRECTED. TOTAL WIDTH OF WORD "SEWER" OR "WATER" 3-3/4". TOTAL WIDTH OF WORD "SURVEY" 4-1/2". LETTER SIZE 5/8" X 3/4", RAISED 1/16" ABOVE LEVEL OF COVER. TYPE OF LETTERS TO BE SUBMITTED FOR APPROVAL. CASTINGS TO CONFORM TO SECT. 787.

3) COMPACTION TO CONFORM TO SECT. 301 OR 601.

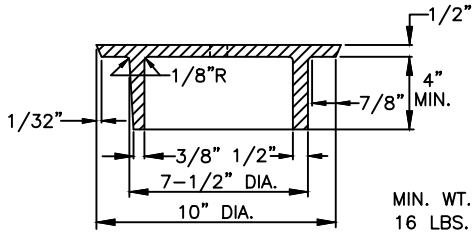

COVER
SECTION A-A

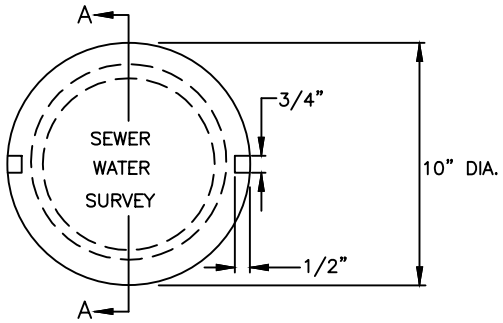

DETAIL NO.	City of Phoenix STANDARD DETAIL	FRAME AND COVER INSTALLATION AND GRADE ADJUSTMENT	APPROVED ACTING CITY ENGINEER 7/31/08 DATE	DETAIL NO.
P1270				P1270

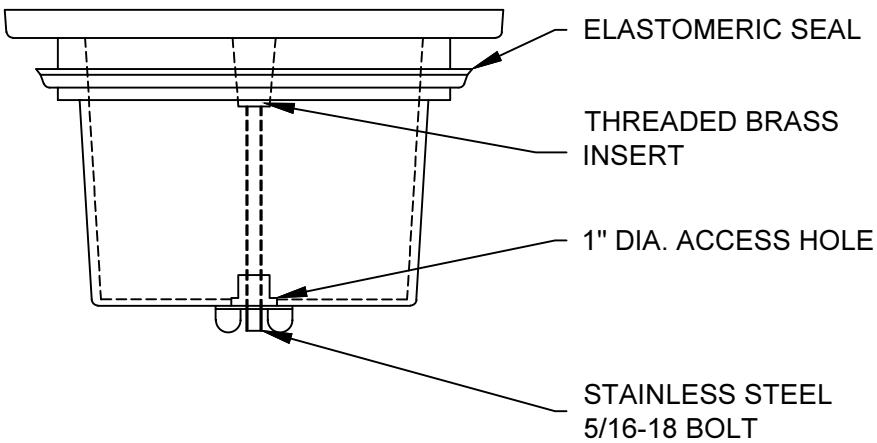

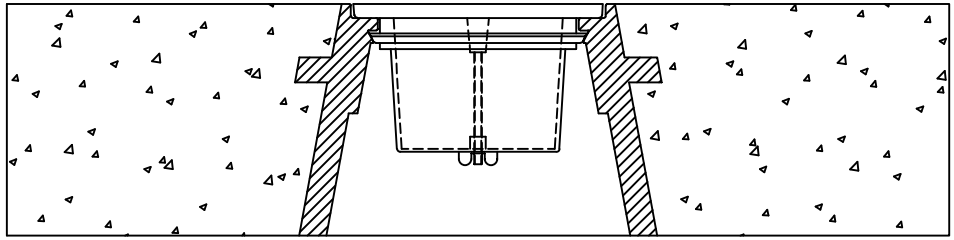

1. BODY OF THE SECURE VALVE BOX LID SHALL BE MOLDED USING AN ABS/POLYCARBONATE ALLOY, AND DISPLAY THE CITY OF PHOENIX LOGO, THE WORDS "CITY OF PHOENIX", AND "WATER".

2. WITH AN ELASTOMERIC SEAL WHICH WHEN PRESSED INTO PLACE BENEATH THE LID-SEAT, EXPANDS TO A DIAMETER GREATER THAN THE OPENING THROUGH WHICH IT WAS PASSED, BUT CAPABLE OF FOLDING BACK DURING LID EXTRACTION.

3. A HOLLOW ENCLOSURE MOLDED USING AN ABS/POLYCARBONATE ALLOY. CAPABLE OF BEING FILLED WITH A GRANULAR MATERIAL, FOR ADDITIONAL WEIGHT IF DESIRED, MUST BE AFFIXED BENEATH THE SURFACE PLATE OF LID, WITH SERIES 3400 STAINLESS STEEL 5/16"-18 BOLT INSERTED INTO THREADED BRASS INSERT MOLDED IN LID.

4. HOLLOW ENCLOSURE TO EXTEND A MINIMUM OF 4" BENEATH THE LID-SEAT, AND BE SECURED BY A STAINLESS STEEL BOLT EXTENDING THROUGH THE ENCLOSURE INTO THREADED BRASS INSERT IN LID.

5. HOLLOW ENCLOSURE MUST HAVE AN ACCESSIBLE OPENING OF AT LEAST 1" DIAMETER FOR FILLING, WHEN REQUIRED.

6. SECURE VALVE BOX LID TO BE AS MANUFACTURED BY SW SERVICES OR EQUAL.

7. SEE DETAIL P1391 FOR ADDITIONAL INFORMATION ON VALVE BOX INSTALLATIONS.

DETAIL NO.	City of Phoenix STANDARD DETAIL	SECURE VALVE BOX LID TYPE A	APPROVED	DETAIL NO.
P1270–1			Mario Saldamando CITY ENGINEER — 6/27/01 DATE	P1270–1

NO SCALE

NOTE: ALL STEEL PER MAG. SPEC. 770.1

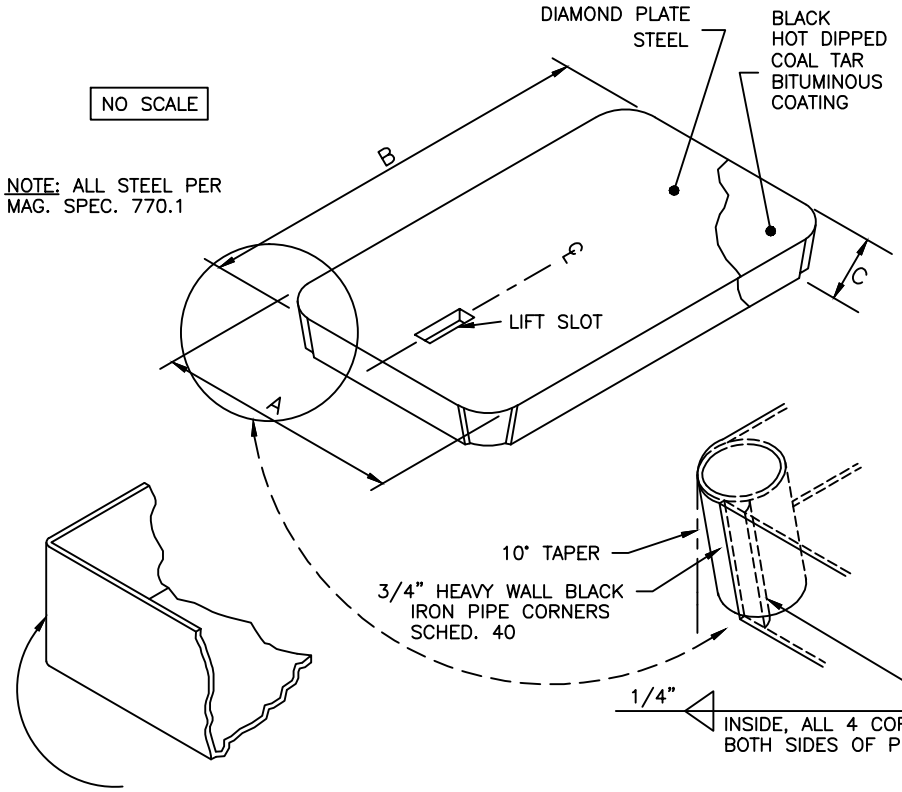

*OPTIONAL 3/16" WELD IN LIEU OF IRON PIPE

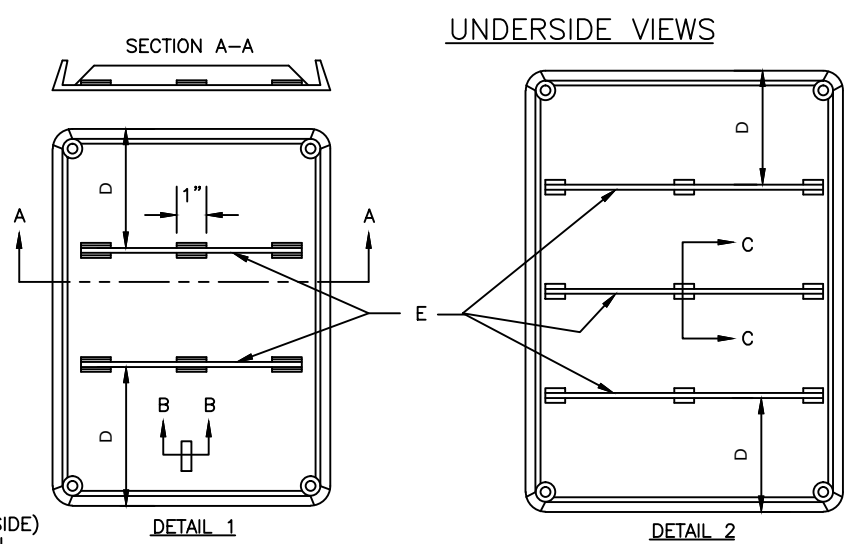

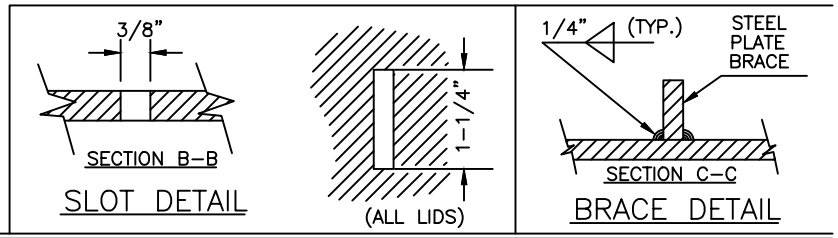

SPECIFICATIONS

NO.	A	B	C	D	E	BRACES	WEIGHT	MATERIAL
1	9"	15–7/8"	1–3/8"	NONE	NONE	NONE	5–1/4 LBS.	14 GAGE
2	14–1/8"	21–3/4"	1–1/2"	6–1/2"	3/16" X 1–1/4" X 13–1/8"	DETAIL 1	12–3/4 LBS.	12 GAGE
3	15–1/4"	26–1/4"	1–1/2"	8–1/4"	3/16" X 1–1/4" X 14–1/4"	DETAIL 1	19–1/4 LBS.	12 GAGE
4	19–1/2"	30"	1–1/2"	7–1/8"	3/16" X 1–1/4" X 18–3/4"	DETAIL 2	33 LBS.	11 GAGE

DETAIL NO.	City of Phoenix STANDARD DETAIL	STEEL WATER METER BOX COVER	APPROVED	DETAIL NO.
P1315			Kenny W Harris CITY ENGINEER — 7/9/92 DATE	P1315

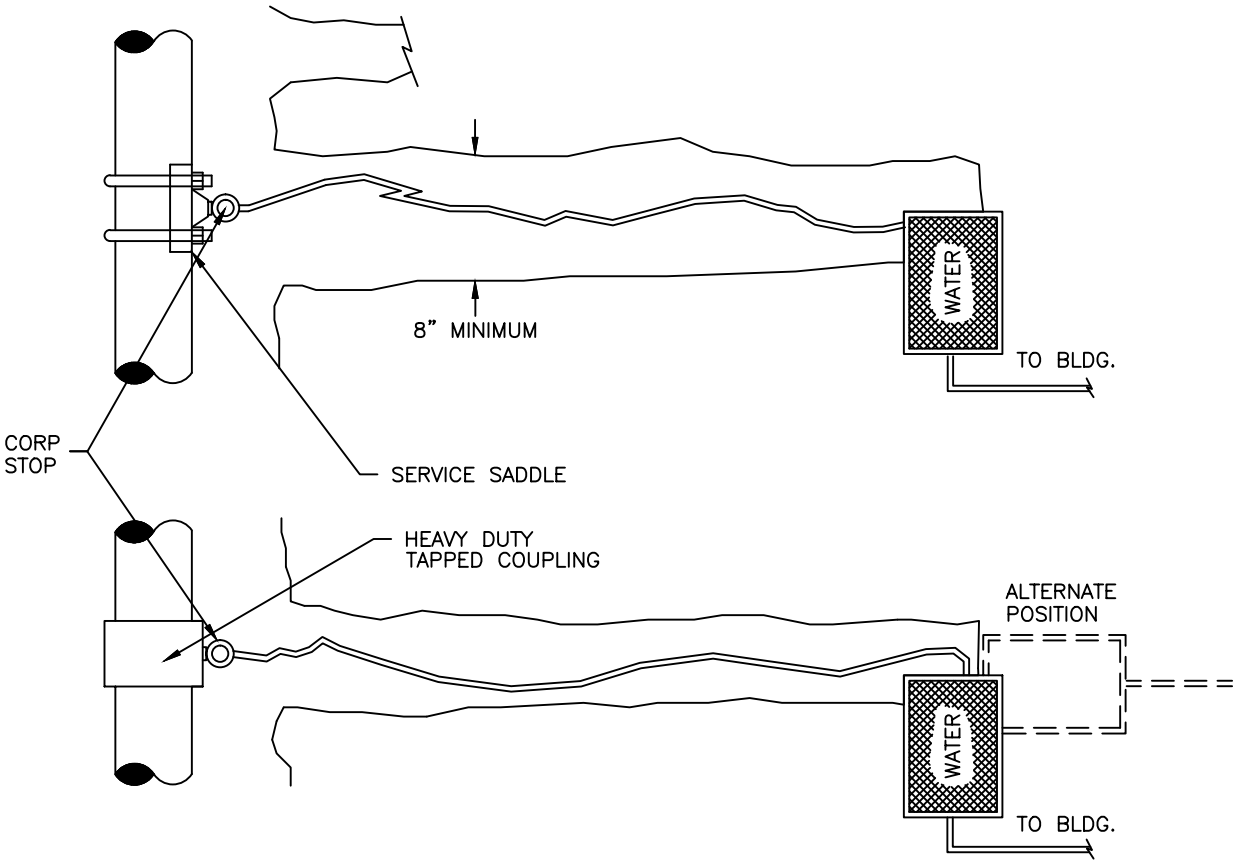

NOTES:

1. NEW WATER SERVICE TAPS SHALL BE INSTALLED USING AN ALL–BRONZE DOUBLE–STRAP TAPPING SADDLE OR A TAPPED COUPLING.
2. 30" MINIMUM COVER IS REQUIRED FOR SERVICE LINES.
3. WATER SERVICE INCLUDES THE CORP. STOP, SERVICE PIPE, APPURTENANT FITTINGS, CURB STOP, METER BOX & COVER. APPROVED WATER SERVICE COMPONENTS ARE LISTED IN CITY OF PHOENIX SUPPLEMENTS.
4. ONLY AUTHORIZED PERSONNEL OF THE WATER & WASTEWATER DEPT. SHALL INSTALL THE SERVICE CONNECTION FOR ANY EXISTING CITY WATER MAIN SERVING ALL OR PART OF A NEW SUBDIVISION.
5. WATER METER WILL BE INSTALLED BY CITY FORCES.
6. FOR 3/4" THROUGH 2" SERVICE USE COPPER PIPE.
7. FOR WATER METER LOCATION SEE CITY OF PHOENIX DETAIL P1363.

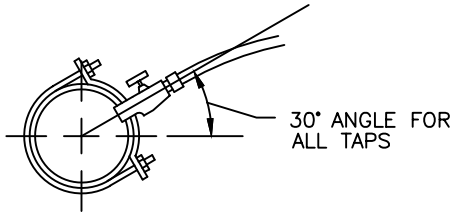

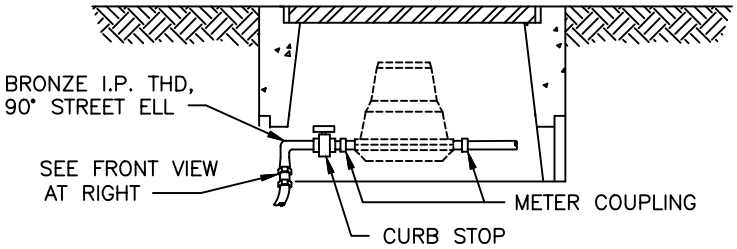

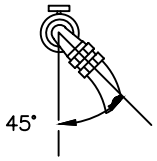

FRONT VIEW

DETAIL NO.	City of Phoenix STANDARD DETAIL	WATER SERVICE CONNECTIONS	APPROVED ACTING CITY ENGINEER 7/31/08 DATE	DETAIL NO.
P1342				P1342

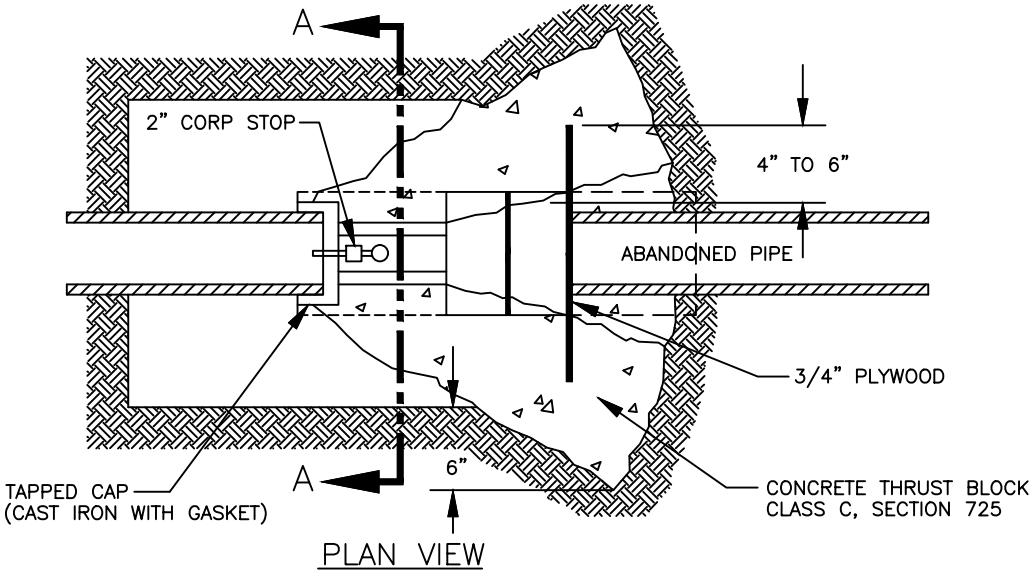

PLAN VIEW

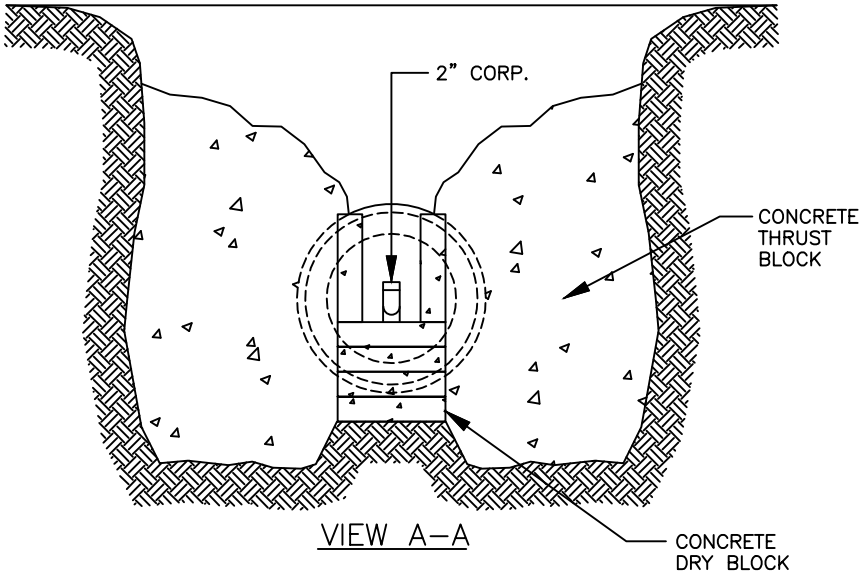

VIEW A–A

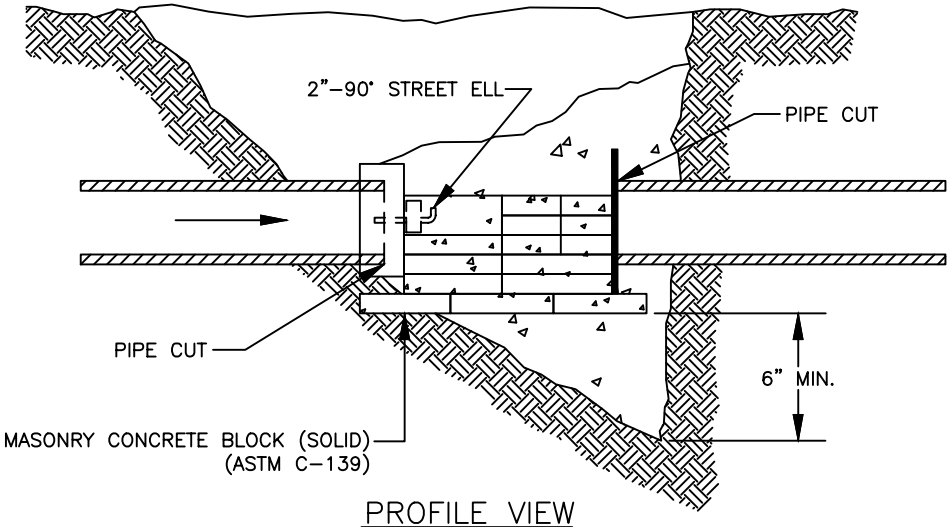

PROFILE VIEW

NOTES:

1. CUT AND PLUGS MUST BE ADEQUATELY "DRY BLOCKED".
2. DRY BLOCKS SHALL BE STANDARD SIZE SOLID MASONRY CONCRETE BLOCKS. (ASTM C–139)
3. THE QUANTITY AND ARRANGEMENT OF THE BLOCKING MUST WITHSTAND LINE PRESSURE BY HOLDING THE CAP OR PLUG IN POSITION.
4. DRY BLOCKING SHALL BE PROPERLY SHIMMED TIGHT AND SECURE AGAINST THE CAP BEFORE LINE PRESSURE IS RESTORED.
5. CONCRETE THRUST BLOCKS SHALL NOT BE POURED UNTIL LINE PRESSURE IS RESTORED AND THE CAP OR PLUG IS INSPECTED FOR LEAKAGE.
6. CONCRETE SHALL NOT BE POURED OVER ANY PORTION OF THE ABANDONED PIPE.
7. MINIMUM THRUST BLOCK AREA PER M.A.G. DETAIL 380.
8. WHERE A 4" OR LARGER LINE IS SPECIFIED TO BE ABANDONED, THE CUT AND PLUG SHOULD OCCUR AT THE SUPPLY MAIN TO AVOID CREATING AN UNUSED DEAD END LINE.

DETAIL NO.	City of Phoenix STANDARD DETAIL	WATERLINE – CUT AND PLUG FOR 12" DIA. MAIN AND SMALLER	APPROVED CITY ENGINEER — DATE 5/31/94	DETAIL NO.
P1343				P1343

NOTES:

1. REPLACEMENT PIPE MATERIAL SHALL BE IN KIND OR DUCTILE IRON.
2. WHERE POSSIBLE, ONE END OF THE REPLACEMENT PIPE SECTION SHALL CONNECT TO AN EXISTING BELL OR SPIGOT.
3. FLEXIBLE COUPLING SHALL BE THE CAST IRON TYPE AND SPECIFICALLY DESIGNED FOR USE ON THE PIPE SIZE AND MATERIAL(S) BEING CON-NECTED. USE OF FULL CIRCLE REPAIR CLAMPS IS PROHIBITED.
4. THE NEW REPLACEMENT PIPE SECTION SHALL BE ADEQUATELY DRY BLOCKED PRIOR TO BACKFILLING.
5. BACKFILLING SHALL NOT BEGIN UNTIL LINE PRESSURE IS RESTORED AND CONNECTIONS INSPECTED FOR LEAKAGE BY WATER DEPARTMENT PERSONNEL.
6. DRY BLOCKS SHALL BE STANDARD SIZE SOLID MASONRY CONCRETE BLOCKS. (ASTM C-139)
7. REPLACEMENT PIPE SHALL BE CLEANED IN ACCORDANCE WITH SECTION 611.1.

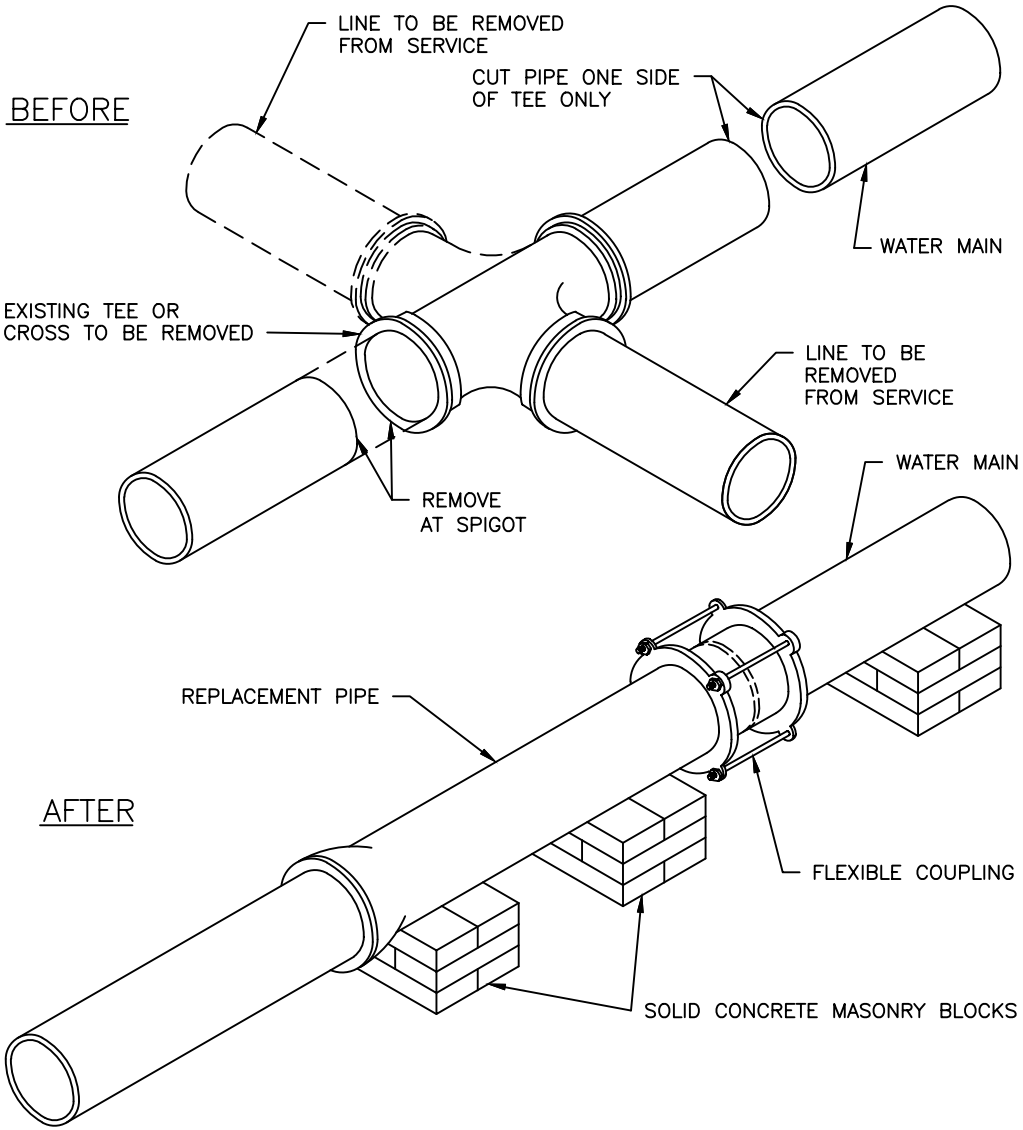

DETAIL NO.	City of Phoenix STANDARD DETAIL	WATERLINE CUT OUT (TEES & CROSSES) FOR 12" DIA. MAIN AND SMALLER	APPROVED CITY ENGINEER — DATE 7/9/92	DETAIL NO.
P1344				P1344

ASSEMBLY SIZE	APPROX. DIMENSION "A"
3"	14"
4"	16"–(22" OS&Y)
6"	20"–(30" OS&Y)
8"	25"–(40" OS&Y)
10"	29"–(48" OS&Y)
12"	32"–(56" OS&Y)

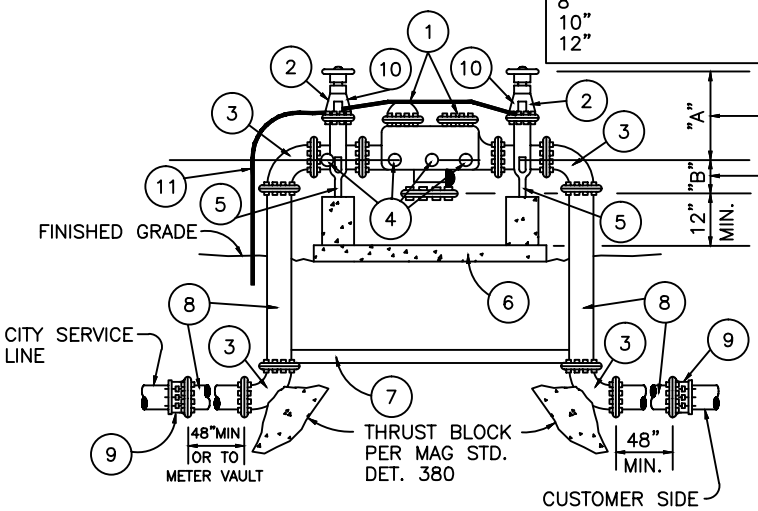

ASSEMBLY SIZE	APPROX DIM "B"
3"	10"
4"	11"
6"	12"
8"	22"
10"	23"
12"	24"

GENERAL NOTES

1. ASSEMBLY SHALL BE APPROVED BY U.S.C. FOUNDATION FOR CROSS CONNECTION AND HYDRAULIC RESEARCH.
2. CONTACT CITY OF PHOENIX DEVELOPMENT SERVICES DEPARTMENT, CROSS–CONNECTION CONTROL FOR A LIST OF APPROVED BACKFLOW PREVENTION ASSEMBLIES.
3. FOUR (4) TEST COCKS TO BE INSTALLED PER U.S.C.
4. COPPER FITTINGS SHALL BE CONNECTED WITH LEAD–FREE SOLDER JOINTS.
5. FINISHED GRADE BELOW BACKFLOW PREVENTER SHALL BE 95% COMPACTION.
6. ASSEMBLY MAY BE PAINTED TO BLEND WITH LANDSCAPE SURFACE TREATMENT OR ON–SITE STRUCTURES.
7. THE ASSEMBLY MAY ALSO BE SCREENED WITH SHRUBBERY OR BE ENCLOSED WITHIN A WALL TYPE STRUCTURE. ADEQUATE DRAINAGE FOR SURFACE WATER IS REQUIRED.
8. ANY SCREENING/ENCLOSURE MUST PROVIDE A MINIMUM 18" ACCESS OPENING (UNSECURED GATES ARE ACCEPTABLE) AND SIDE WALLS OR SHRUBBERY MUST BE A MINIMUM OF 24" FROM THE OUTSIDE FACE OF ANY PORTION OF THE BACKFLOW PREVENTION DEVICE.
9. ASSEMBLY MAY BE PROTECTED BY GUARD POSTS (MODIFY P–1359, HYDRANT GUARDS, PHOENIX SUPPLEMENT TO MAG).

REDUCED PRESSURE PRINCIPLE DEVICE

LIST OF MATERIALS

1. APPROVED REDUCED PRESSURE PRINCIPLE BACKFLOW PREVENTION DEVICE.
2. GATE VALVE, RESILIENT SEATED (NON–RISING STEM)(O.S.&Y. REQUIRED ON FIRELINES).
3. 90° ELL (FLANGED D.I.P. 3" THROUGH 12").
4. TEST COCK, RESILIENT SEATED (4 REQUIRED) FIT WITH BRASS PLUG.
5. ADJUSTABLE PIPE SUPPORT PERMANENTLY ATTACHED TO BASE (4" AND LARGER ASSEMBLY ONLY).
6. CONCRETE SUPPORT PAD 4" THICK BY 18" WIDE MINIMUM BENEATH 4" AND LARGER ASSEMBLIES. (CLASS "A" CONCRETE)
7. 3"X3"X1/4" STEEL ANGLE. BOLT TO FLANGE, EACH END WITH ONE BOLT. COAT WITH COAL TAR EPOXY (16 MILS) REQUIRED ON 4" AND LARGER ASSEMBLIES.
8. PIPE SPOOL (FLANGED D.I.P. 3" THRU 12").
9. FLANGED ADAPTER (WHEN REQUIRED).
10. TAMPER SWITCH (ON FIRELINE ONLY, OPTIONAL).
11. ELECTRICAL CONDUIT FOR TAMPER SWITCH.

DETAIL NO.	City of Phoenix STANDARD DETAIL	REDUCED PRESSURE PRINCIPLE BACKFLOW PREVENTION ASSEMBLY INSTALLATION – 3" AND OVER	APPROVED Mario Saldamando CITY ENGINEER 6/27/01 DATE	DETAIL NO.
P1351				P1351

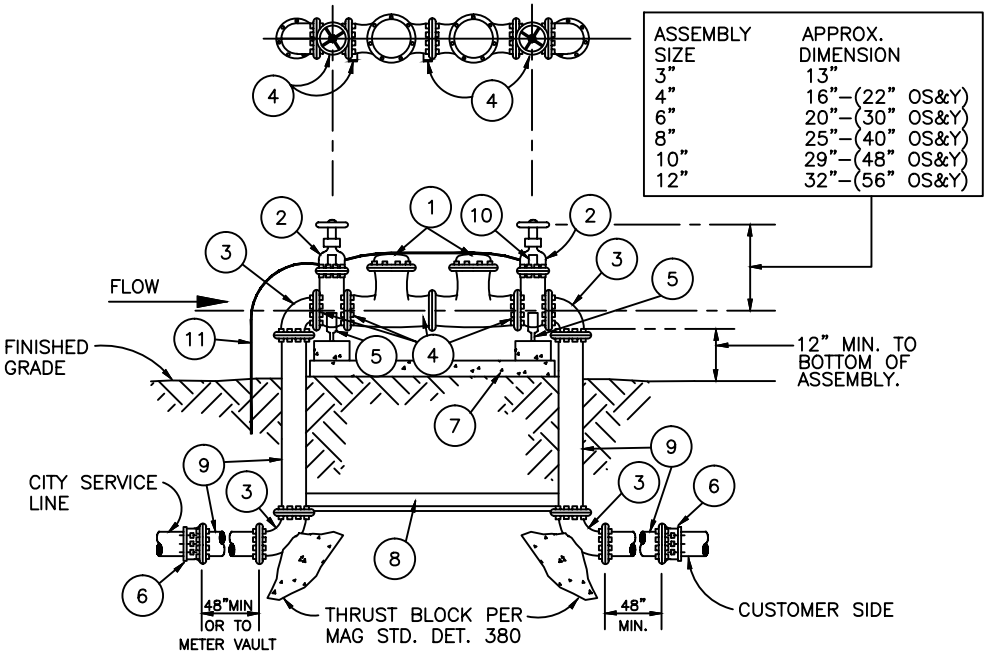

ASSEMBLY SIZE	APPROX. DIMENSION
3"	13"
4"	16"–(22" OS&Y)
6"	20"–(30" OS&Y)
8"	25"–(40" OS&Y)
10"	29"–(48" OS&Y)
12"	32"–(56" OS&Y)

DOUBLE CHECK VALVE ASSEMBLY

GENERAL NOTES

1. ASSEMBLY SHALL BE APPROVED BY U.S.C. FOUNDATION FOR CROSS CONNECTION AND HYDRAULIC RESEARCH.
2. CONTACT CITY OF PHOENIX DEVELOPMENT SERVICES DEPARTMENT, CROSS–CONNECTION CONTROL FOR A LIST OF APPROVED BACKFLOW PREVENTION ASSEMBLIES.
3. FOUR (4) TEST COCKS TO BE INSTALLED PER U.S.C.
4. COPPER FITTINGS SHALL BE CONNECTED WITH LEAD–FREE SOLDER JOINTS.
5. FINISHED GRADE BELOW BACKFLOW PREVENTER SHALL BE 95% COMPACTION.
6. ASSEMBLY MAY BE PAINTED TO BLEND WITH LANDSCAPE SURFACE TREATMENT OR ON–SITE STRUCTURES.
7. THE ASSEMBLY MAY ALSO BE SCREENED WITH SHRUBBERY OR BE ENCLOSED WITHIN A WALL TYPE STRUCTURE. ADEQUATE DRAINAGE FOR SURFACE WATER IS REQUIRED.
8. ANY SCREENING/ENCLOSURE MUST PROVIDE A MINIMUM 18" ACCESS OPENING (UNSECURED GATES ARE ACCEPTABLE) AND SIDE WALLS OR SHRUBBERY MUST BE A MINIMUM OF 24" FROM THE OUTSIDE FACE OF ANY PORTION OF THE BACKFLOW PREVENTION DEVICE.
9. ASSEMBLY MAY BE PROTECTED BY GUARD POSTS (MODIFY P–1359, HYDRANT GUARDS, PHOENIX SUPPLEMENT TO MAG).

LIST OF MATERIALS

1. APPROVED DOUBLE CHECK VALVE ASSEMBLY.
2. GATE VALVE, RESILIENT SEATED (NON–RISING STEM)(O.S.&Y. REQUIRED ON FIRELINE).
3. 90° ELL (FLANGED D.I.P. 3" THROUGH 12").
4. TEST COCK, RESILIENT SEATED (4 REQUIRED) FIT WITH BRASS PLUG.
5. ADJUSTABLE PIPE SUPPORT PERMANENTLY ATTACHED TO BASE (4" AND LARGER ASSEMBLY ONLY).
6. FLANGE ADAPTER (WHEN REQUIRED).
7. CONCRETE SUPPORT PAD 4" THICK BY 18" WIDE MINIMUM BENEATH 4" AND LARGER ASSEMBLIES. (CLASS "A" CONC).
8. 3"X3"X1/4" STEEL ANGLE. BOLT TO FLANGE, EACH END WITH ONE BOLT. COAT WITH COAL TAR EPOXY (16 MILS) REQUIRED ON 4" AND LARGER ASSEMBLIES.
9. PIPE SPOOL (FLANGED D.I.P. 3" THRU 12").
10. TAMPER SWITCH (ON FIRELINE ONLY, OPTIONAL).
11. ELECTRICAL CONDUIT FOR TAMPER SWITCH.

DETAIL NO.	City of Phoenix STANDARD DETAIL	DOUBLE CHECK VALVE BACKFLOW PREVENTION ASSEMBLY INSTALLATION – 3" AND OVER	APPROVED Mario Sadamando CITY ENGINEER 6/27/01 DATE	DETAIL NO.
P1352				P1352

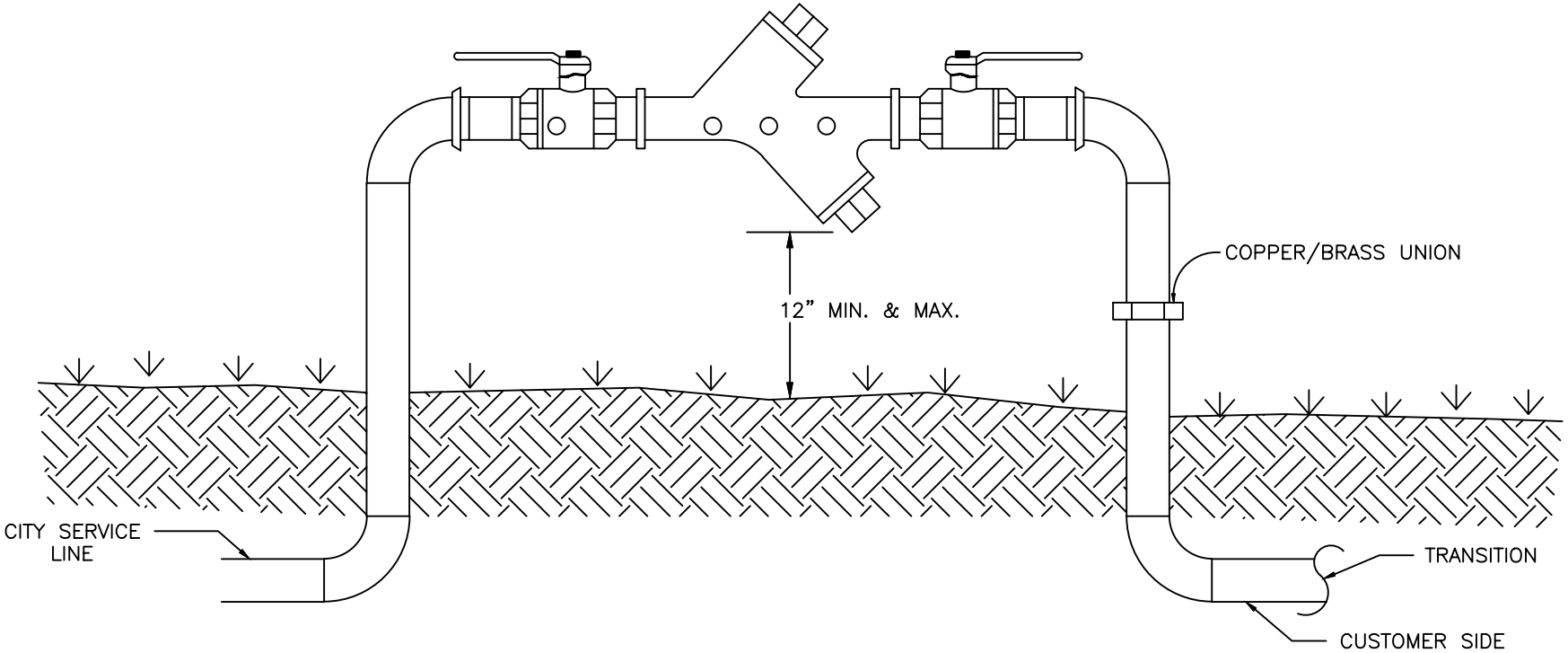

NOTES:

1. ALL PIPE/FITTINGS TO BE TYPE "K" COPPER.
2. CONTACT CITY OF PHOENIX DEVELOPMENT SERVICES DEPARTMENT, CROSS-CONNECTION CONTROL FOR A LIST OF APPROVED BACKFLOW PREVENTION ASSEMBLIES.
3. BACKFLOW PREVENTION ASSEMBLY MUST BE LEVEL AND INSTALLED A MINIMUM AND A MAXIMUM OF 12 INCHES FROM ASSEMBLY BODY TO FINAL GRADE.
4. TEST COCKS, (4) SHALL BE FITTED WITH BRASS PLUGS INSTALLED WITH TEFLON TAPE.
5. SHUTOFF VALVES TO BE RESILIENT BALL TYPE WITH REMOVABLE HANDLES.
6. COMPRESSION TYPE FITTINGS ARE NOT ALLOWED.
7. INSTALL THE BACKFLOW PREVENTION ASSEMBLY IMMEDIATELY DOWNSTREAM OF THE CITY WATER METER.
8. A COPPER/BRASS UNION MUST BE INSTALLED IN THE MIDDLE OF THE DOWNSTREAM RISER.
9. ASSEMBLY SHALL BE APPROVED BY U.S.C. FOUNDATION FOR CROSS-CONNECTION CONTROL AND HYDRAULIC RESEARCH.
10. COPPER FITTINGS SHALL BE CONNECTED WITH LEAD-FREE SOLDER JOINTS.
11. TRANSITION FROM "K" COPPER TO OTHER APPROVED PIPING MATERIALS SHALL BE IN THE HORIZONTAL PIPING A MINIMUM OF 12" BELOW GRADE.

DETAIL NO.	City of Phoenix STANDARD DETAIL	DOUBLE CHECK VALVE BACKFLOW PREVENTION ASSEMBLY INSTALLATION – 2 1/2" AND UNDER	APPROVED Mario Sadamando CITY ENGINEER 6/27/01 DATE	DETAIL NO.
P1353				P1353

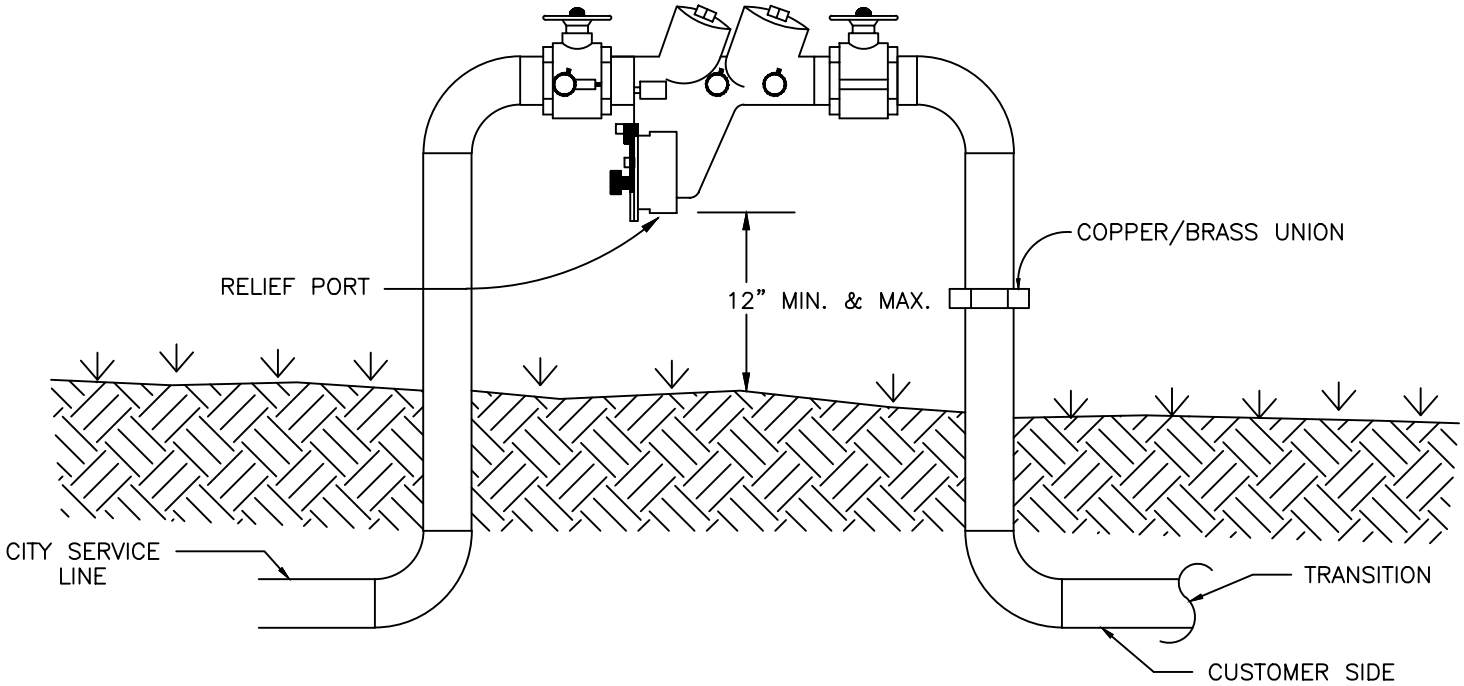

NOTES:

1. ALL PIPE/FITTINGS TO BE TYPE "K" COPPER.
2. ASSEMBLY SHALL BE APPROVED BY U.S.C. FOUNDATION FOR CROSS-CONNECTION CONTROL AND HYDRAULIC RESEARCH.
3. INSTALL BACKFLOW PREVENTION ASSEMBLY WITH RELIEF PORT FACING TOWARD THE GROUND.
4. BACKFLOW PREVENTION ASSEMBLY MUST BE LEVEL AND INSTALLED A MINIMUM AND A MAXIMUM OF 12 INCHES FROM RELIEF PORT TO FINAL GRADE.
5. PAVER CONCRETE BLOCK UNDER RELIEF PORT, SET AT FINAL GRADE.
6. TEST COCKS, (4) SHALL BE FITTED WITH BRASS PLUGS AND INSTALLED WITH TEFLON TAPE.
7. SHUTOFF VALVES TO BE RESILIENT BALL TYPE WITH REMOVABLE HANDLES.
8. COMPRESSION TYPE FITTINGS ARE NOT ALLOWED.
9. INSTALL THE BACKFLOW PREVENTION ASSEMBLY IMMEDIATELY DOWNSTREAM OF THE CITY WATER METER.
10. A COPPER/BRASS UNION MUST BE INSTALLED IN THE MIDDLE OF THE DOWNSTREAM RISER.
11. CONTACT CITY OF PHOENIX DEVELOPMENT SERVICES DEPARTMENT, CROSS-CONNECTION CONTROL FOR A LIST OF APPROVED BACKFLOW PREVENTION ASSEMBLIES.
12. COPPER FITTINGS SHALL BE CONNECTED WITH LEAD-FREE SOLDER JOINT.
13. TRANSITION FROM "K" COPPER TO OTHER APPROVED PIPING MATERIAL SHALL BE IN THE HORIZONTAL PIPING A MINIMUM OF 12" BELOW GRADE.

DETAIL NO.	City of Phoenix STANDARD DETAIL	REDUCED PRESSURE PRINCIPLE BACKFLOW PREVENTION ASSEMBLY INSTALLATION – 2 1/2" AND UNDER	APPROVED Mario Sadamando CITY ENGINEER 6/27/01 DATE	DETAIL NO.
P1354				P1354

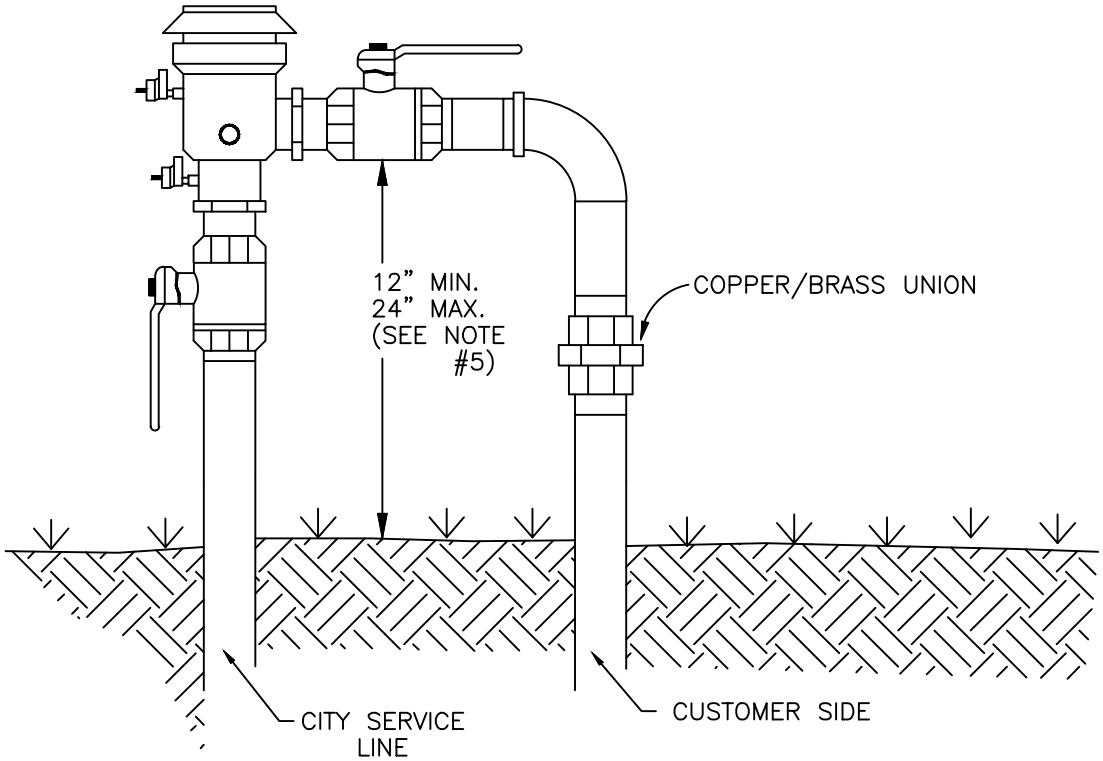

NOTES:

1. CONTACT CITY OF PHOENIX DEVELOPMENT SERVICES DEPARTMENT, CROSS-CONNECTION CONTROL FOR A LIST OF APPROVED PRESSURE VACUUM BREAKER ASSEMBLIES.
2. ASSEMBLY SHALL BE APPROVED BY U.S.C. FOUNDATION FOR CROSS-CONNECTION CONTROL AND HYDRAULIC RESEARCH.
3. TWO (2) TEST COCKS SHALL BE FITTED WITH BRASS PLUGS INSTALLED WITH TEFLON TAPE.
4. SHUTOFF BALL VALVES MUST BE RESILIENT SEATED VALVES AS PER U.S.C..
5. ASSEMBLY MUST BE INSTALLED 12 INCHES ABOVE THE HIGHEST OUTLET ON THE SYSTEM. IF THE DISTANCE EXCEEDS 24 INCHES A REDUCED PRESSURE BACKFLOW PREVENTION ASSEMBLY MUST BE USED.
6. ALL PIPE/FITTINGS TO BE TYPE "K" COPPER.
7. A COPPER/BRASS UNION MUST BE INSTALLED IN THE MIDDLE OF THE DOWNSTREAM RISER.
8. INSTALL THE BACKFLOW PREVENTION ASSEMBLY IMMEDIATELY DOWNSTREAM OF THE CITY WATER METER.
9. COPPER FITTINGS TO BE CONNECTED WITH LEAD-FREE SOLDER JOINTS.
10. TRANSITION FROM "K" COPPER TO OTHER APPROVED PIPING MATERIALS SHALL BE IN THE HORIZONTAL PIPING A MINIMUM OF 12" BELOW GRADE.

DETAIL NO.	City of Phoenix STANDARD DETAIL	PRESSURE VACUUM BREAKER ASSEMBLY INSTALLATION – 2" AND UNDER	APPROVED Mario Sadamando CITY ENGINEER 6/27/01 DATE	DETAIL NO.
P1355				P1355

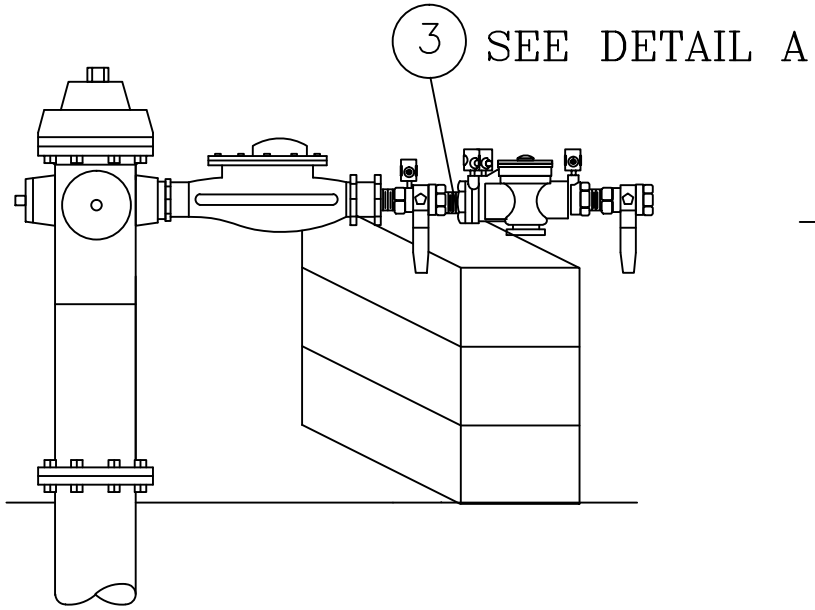

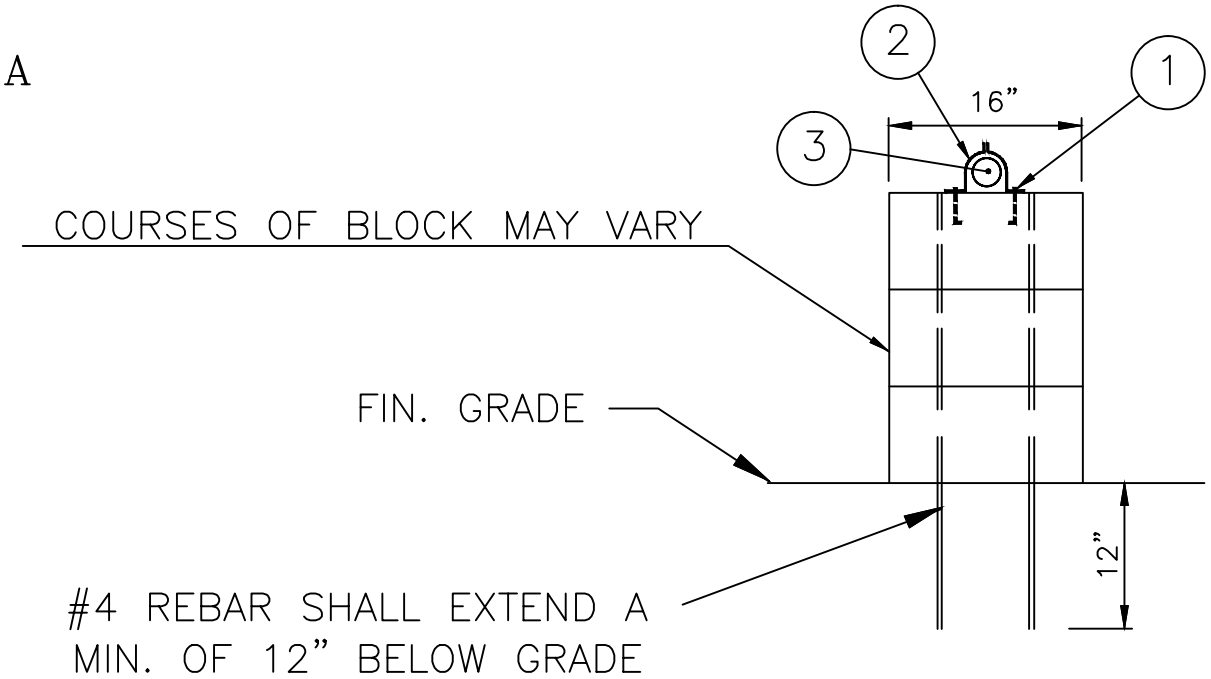

Detail A

NOTES:

1. SECURE BACKFLOW ASSEMBLY WITH APPROVED ANCHORS TO 8"X8"X16" TYPE "B" CONCRETE FILLED BLOCK WITH 2 #4 REBARS. ASSEMBLY SHALL BE TESTED BY CERTIFIED BACKFLOW TESTER.
2. 2-PIECE CLAMP WITH APPROVED ANCHORS.
3. BACKFLOW ASSEMBLY FOR USE WITH DETAIL P1354.
4. CONTACT CITY OF PHOENIX DEVELOPMENT SERVICES DEPARTMENT, CROSS-CONNECTION CONTROL FOR A LIST OF APPROVED BACKFLOW PREVENTION ASSEMBLIES.

DETAIL NO.	City of Phoenix STANDARD DETAIL	TEMPORARY SUPPORT FOR FIRE HYDRANT BACKFLOW ASSEMBLY	APPROVED Mario Sadamando CITY ENGINEER 6/27/01 DATE	DETAIL NO.
P1356				P1356

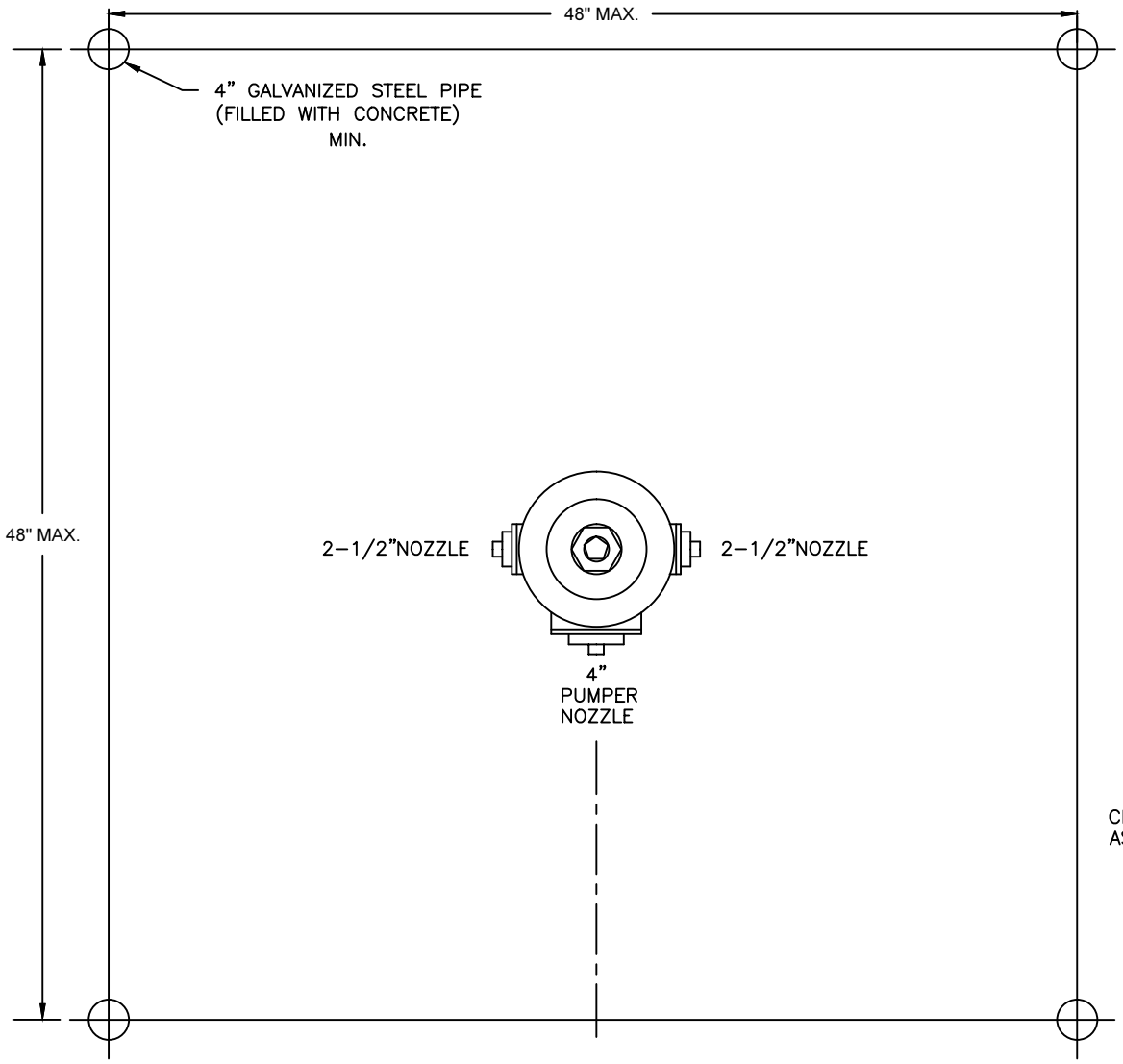

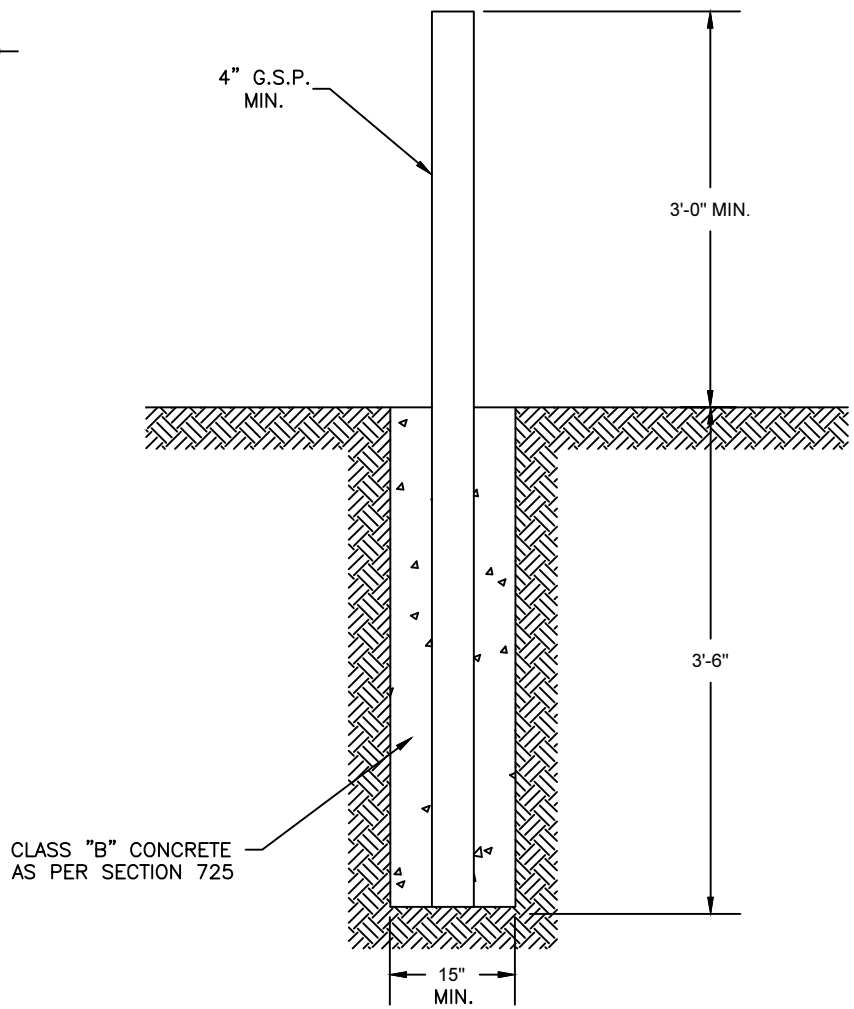

1) AS PER LATEST EDITION CITY OF PHOENIX FIRE PREVENTION CODE – ORDINANCE NO. G–4160, 8001.11.3

DETAIL NO.	City of Phoenix STANDARD DETAIL	HYDRANT GUARDS	APPROVED	DETAIL NO.
P1359			Mario Saldamando — CITY ENGINEER — 6/27/01 DATE	P1359

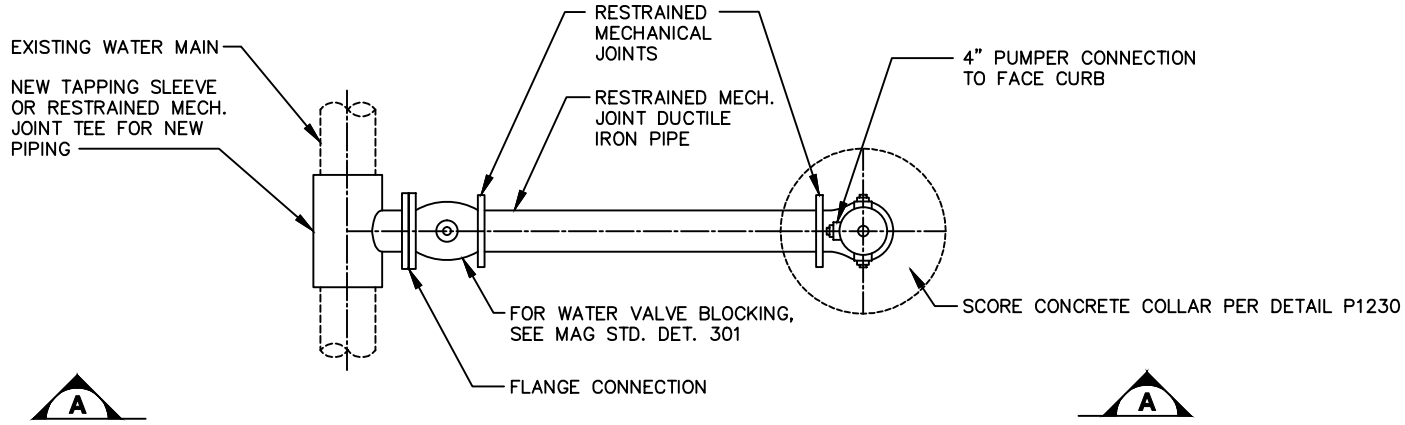

PLAN VIEW

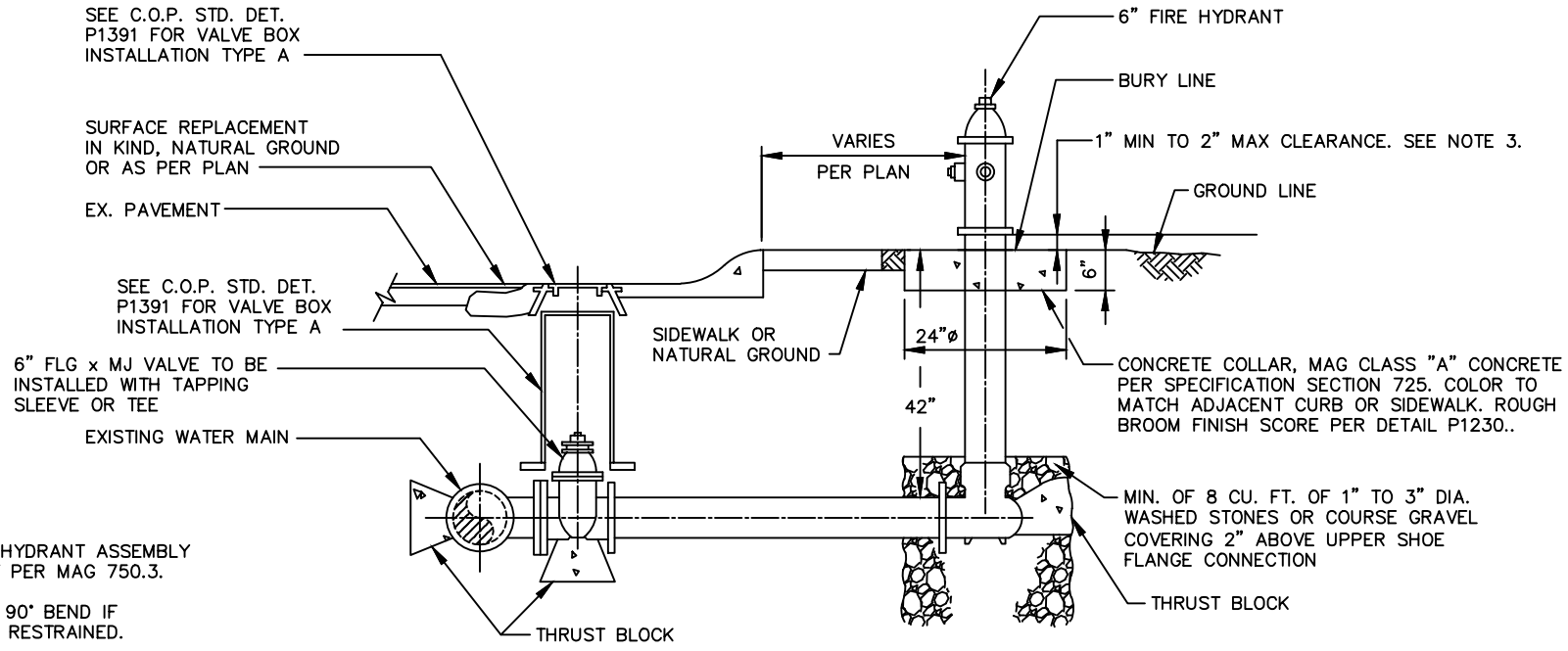

SECTION 'A–A'

NOTES:

1. ALL JOINTS IN FIRE HYDRANT ASSEMBLY TO BE RESTRAINED JOINT PER MAG 750.3.

2. REVERSE TAPS AND 90° BEND IF NEEDED SHALL BE FULLY RESTRAINED.

3. FINISHED GRADE IS DEFINED BY ADJACENT NATURAL GROUND, SIDEWALK, PAVEMENT OR CURB. FINISHED GRADE OR NEARBY OBSTRUCTIONS SHALL NOT DENY WRENCH ACCESS TO THE BOTTOM FLANGE BOLTS.

DETAIL NO.	City of Phoenix STANDARD DETAIL	FIRE HYDRANT ASSEMBLY	APPROVED ACTING CITY ENGINEER 7/31/08 DATE	DETAIL NO.
P1360				P1360

2-1/2" HYDRANT NOZZLE

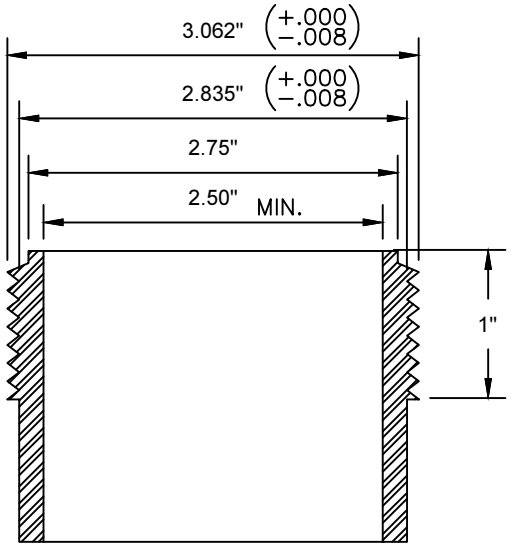

2-1/2" CAP

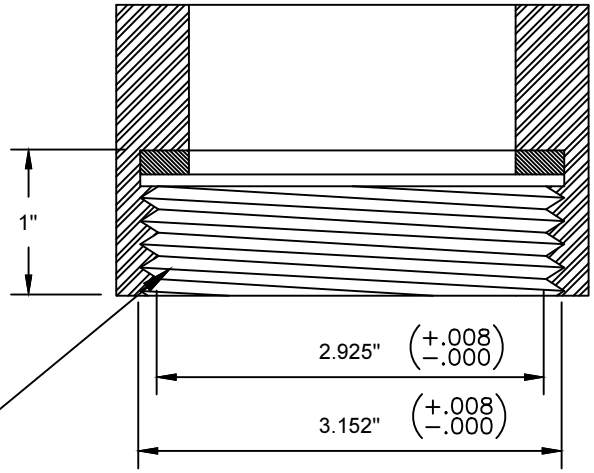

6 THREADS PER INCH

4" HYDRANT NOZZLE

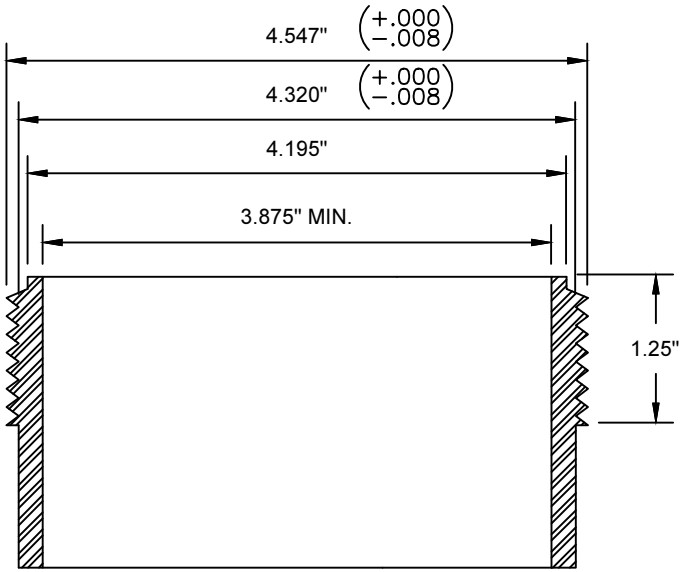

4" CAP

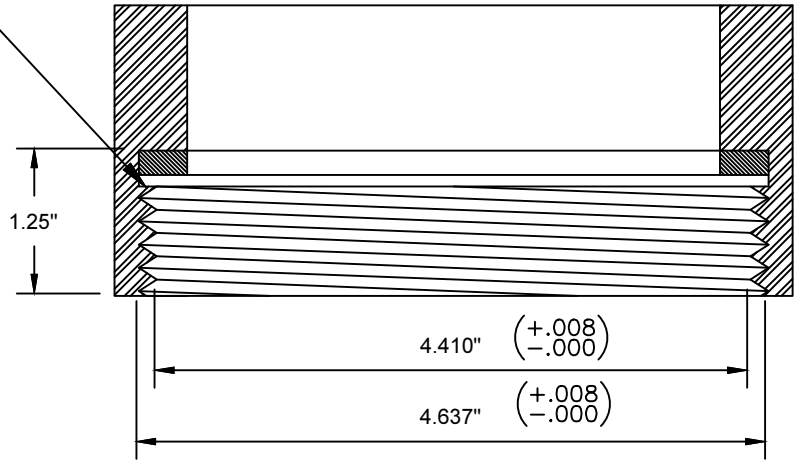

DETAIL NO.				
P1361	City of Phoenix STANDARD DETAIL	FIRE HYDRANT THREADS 2 1/2" & 4"	APPROVED CITY ENGINEER — 7/9/92 DATE	DETAIL NO. P1361

NOTES:

1. OBSTRUCTIONS SUCH AS UTILITY POLES, STREET SIGNS, IRRIGATION BOXES, FENCES, ETC., MUST NOT BE PLACED BETWEEN CURB AND HYDRANT.
2. DIMENSIONS SHOWN ON CONSTRUCTION DRAWINGS SUPERSEDE LOCATIONS SHOWN HERE.
3. ON LOCATIONS IN MIDBLOCK, THE FIRE HYDRANT WILL BE ALIGNED WITH A PROPERTY LINE.

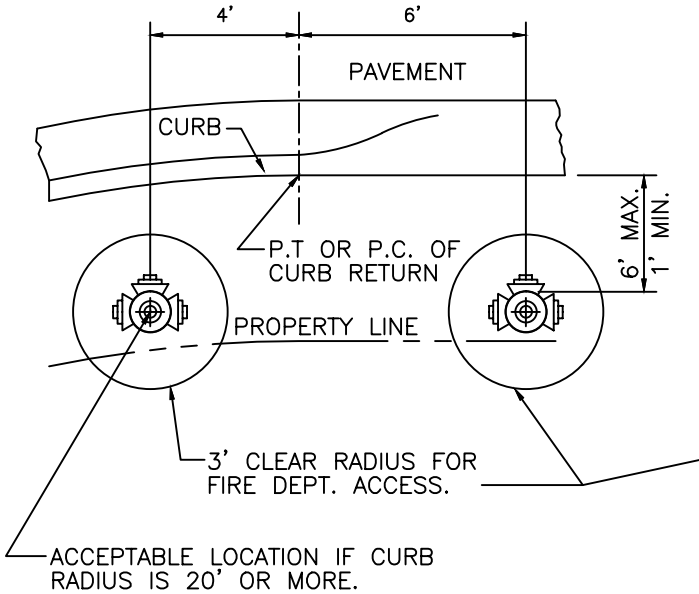

LANDSCAPE AREA WITH PARKWAY OR NO SIDEWALK ADJACENT TO CURB

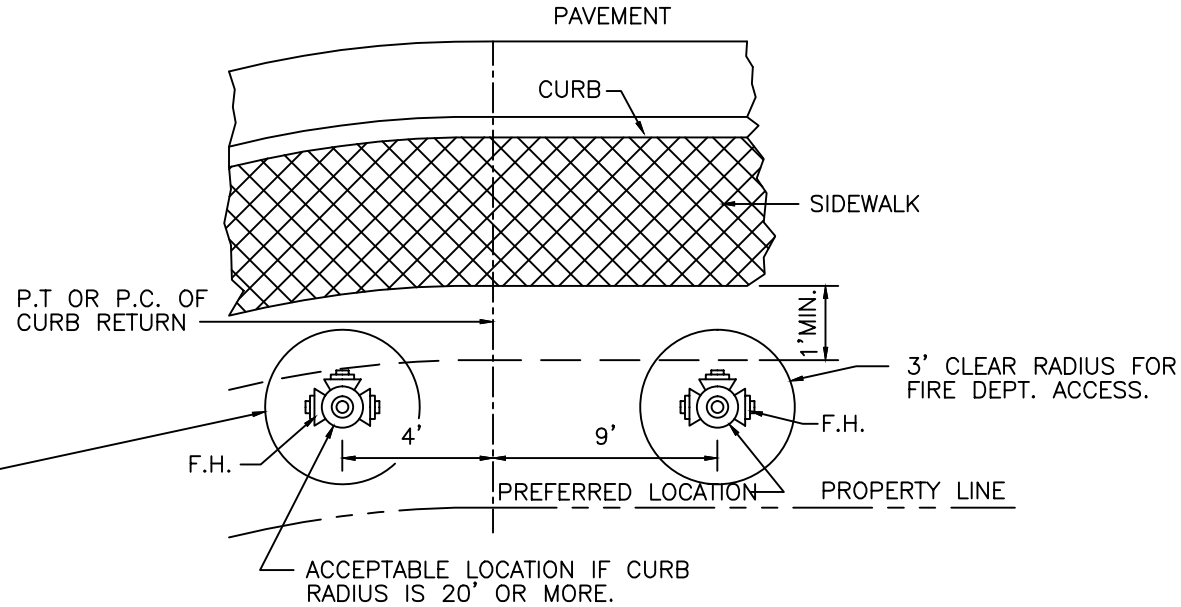

AREA WITH SIDEWALK ADJACENT TO CURB

DETAIL NO.	City of Phoenix STANDARD DETAIL	FIRE HYDRANT LOCATION	APPROVED	DETAIL NO.
P1362			Mario Sadamando — CITY ENGINEER; 7/19/04 — DATE	P1362

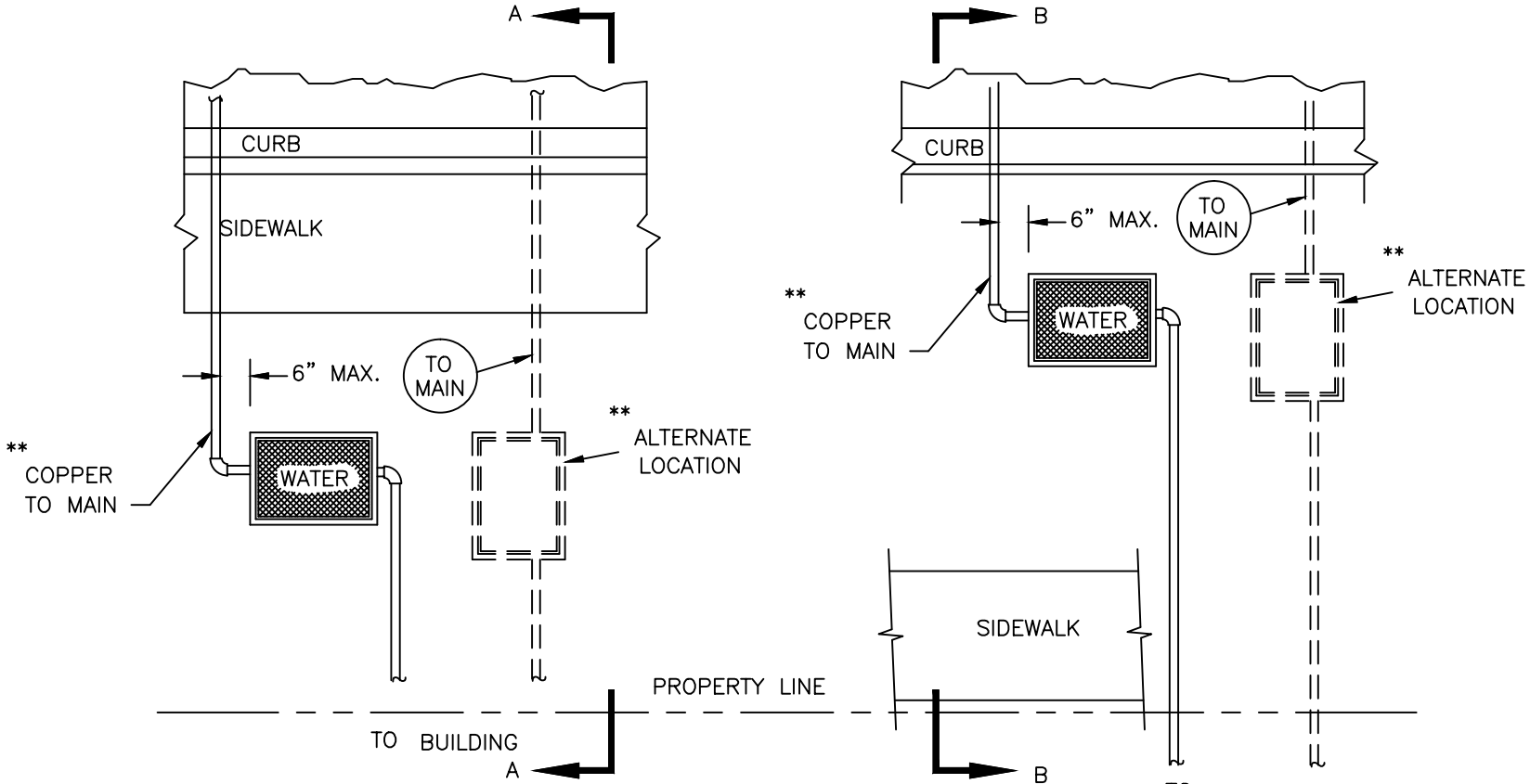

PLAN VIEW WITH SIDEWALK ADJACENT TO CURB

PLAN VIEW WITH PARKWAY OR NO SIDEWALK

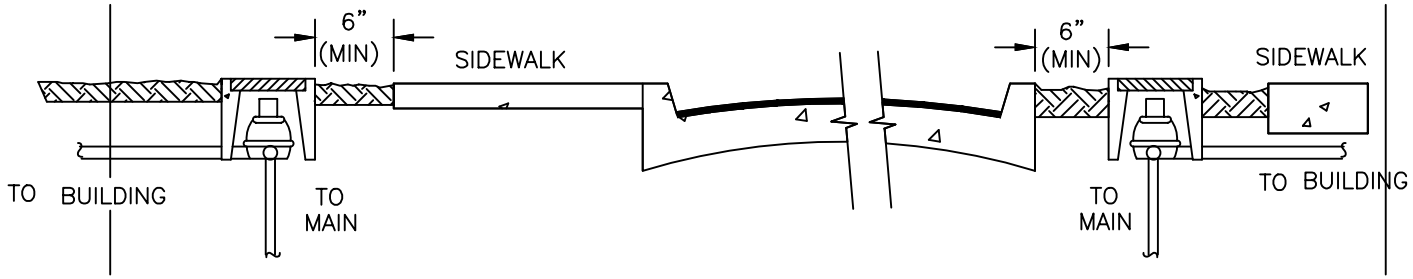

SECTION A–A

SECTION B–B

DETAIL NO.	City of Phoenix STANDARD DETAIL	WATER METER LOCATION	APPROVED	DETAIL NO.
P1363			Mario Sadamando — CITY ENGINEER — 7/3/00 DATE	P1363

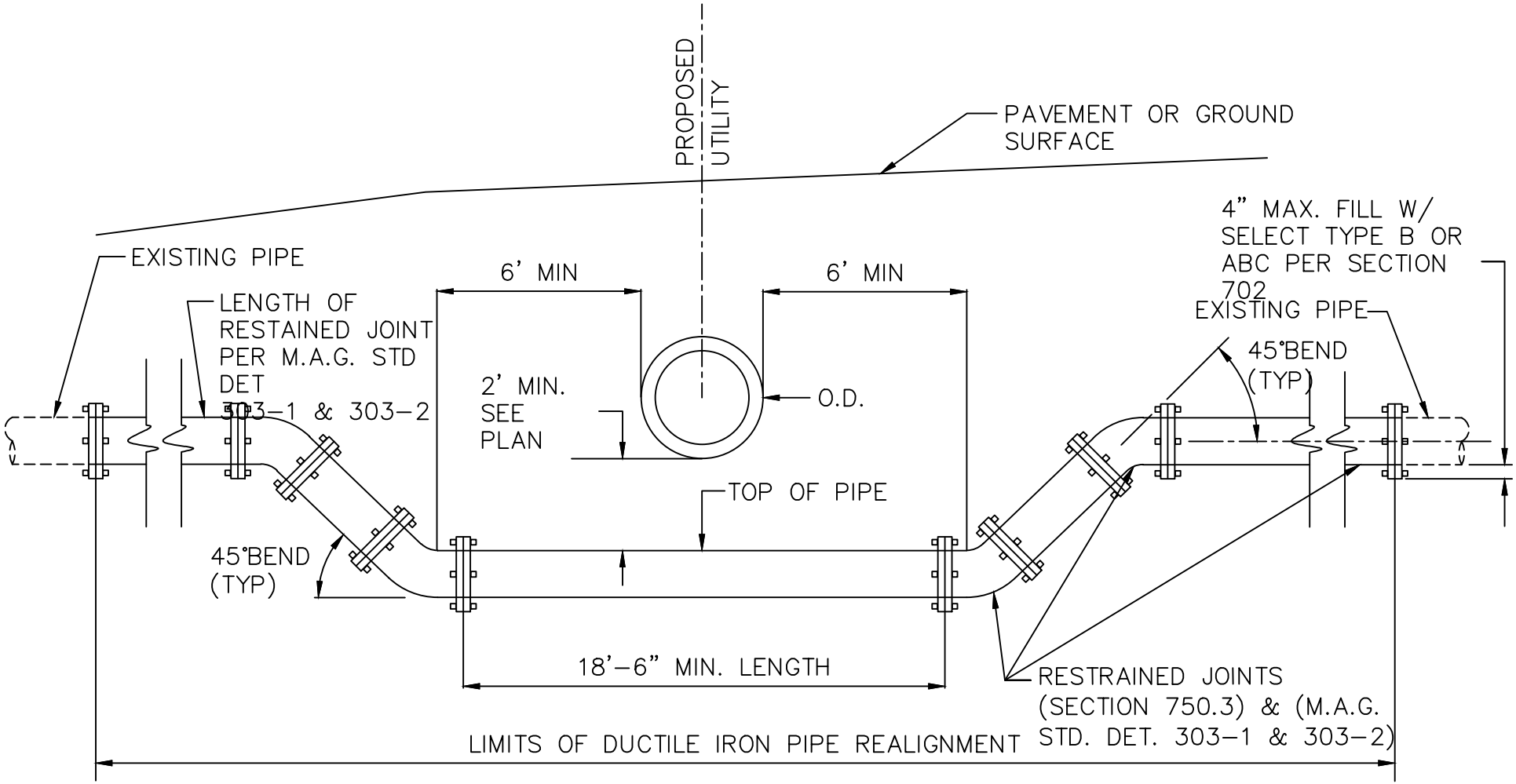

DETAIL NO.	City of Phoenix STANDARD DETAIL	VERTICAL REALIGNMENT OF WATERLINE	APPROVED CITY ENGINEER 12/10/2012 DATE	DETAIL NO.
P1370				P1370

NOTES:

1. VALVE OPERATION NUT EXTENSION: SEE DETAIL P1391–1
   EXTENSION TO VALVE STEMS REQUIRED ON ALL VALVES WHERE OPERATING NUT IS OVER 5' BELOW SURFACE. LENGTH TO FIT EACH INSTALLATION.

2. IF TWO OR MORE JOINTS OF C900 PVC "WATER" PIPE RISER ARE NEEDED, THEY SHALL BE COUPLED AND GLUED WITH APPROPRIATE PVC GLUE TO FORM A DEBRIS–TIGHT JOINT.

3. VALVE BOX SHALL BE ADJUSTED TO THE FINISH GRADE AFTER PLACING THE ASPHALTIC CONCRETE SURFACE.

4. USE PARKSON TYLER, APCO, OR EQUAL DEEP SKIRTED COVER LID (4" DEEP OR MORE) C.I. MIN. T.S. 30,000 P.S.I. USE SECURE POLYMER VALVE BOX LID WITH LID–RETENTION ELASTOMERIC SEAL PER DETAIL P1270–1 WHERE "SECURE" LIDS ARE SPECIFIED.

5. GROUND BELOW CONCRETE PAD TO BE COMPACTED TO MIN. 95% OF MAX DENSITY.

6. INSTALL DEBRIS CAP PER DETAIL P1165.

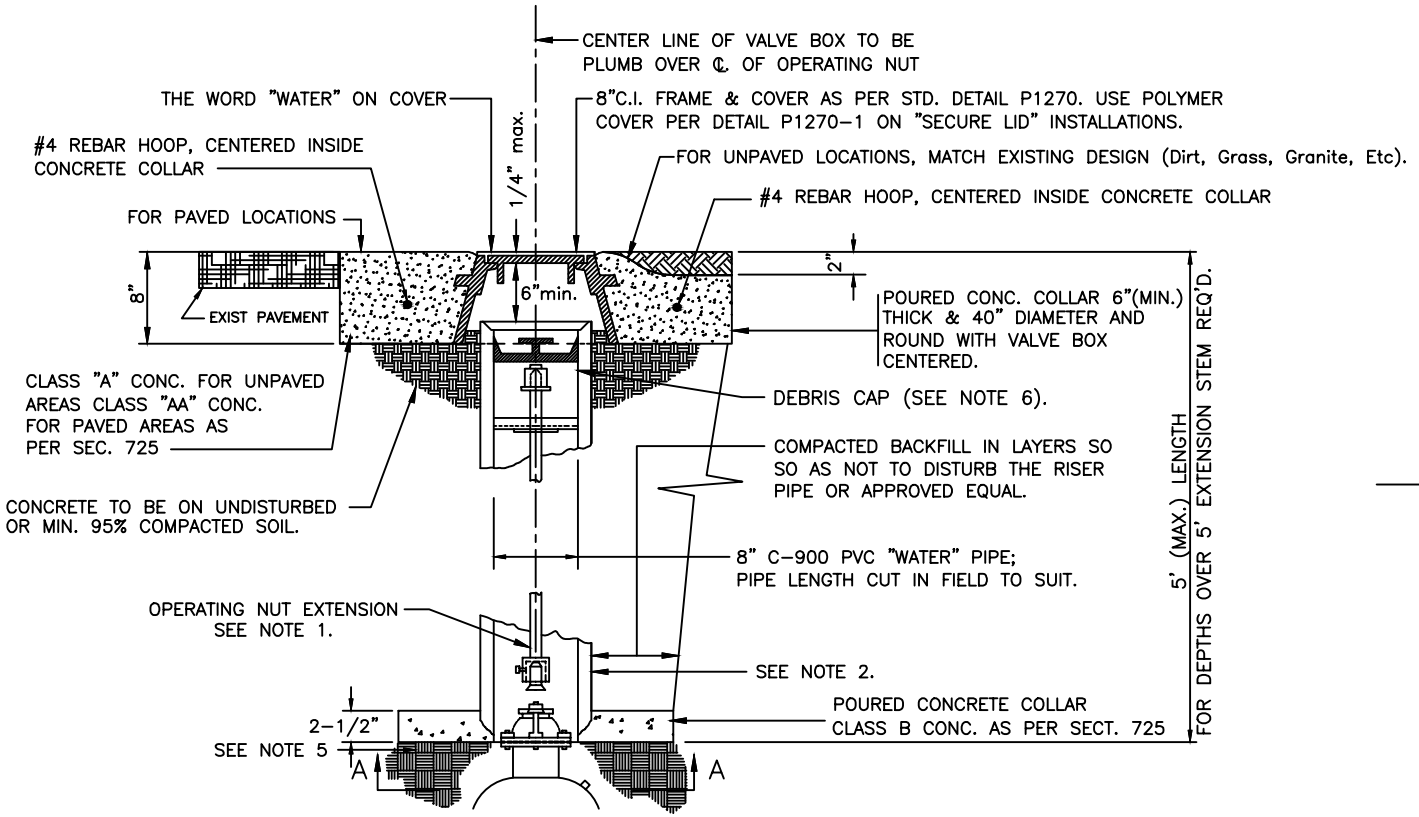

TYPE 'A'

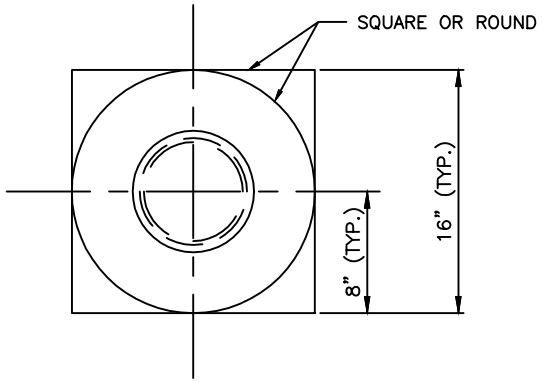

VIEW A–A

DETAIL NO.				
P1391	City of Phoenix STANDARD DETAIL	VALVE BOX INSTALLATION	APPROVED ACTING CITY ENGINEER — DATE 7/31/08	DETAIL NO. P1391

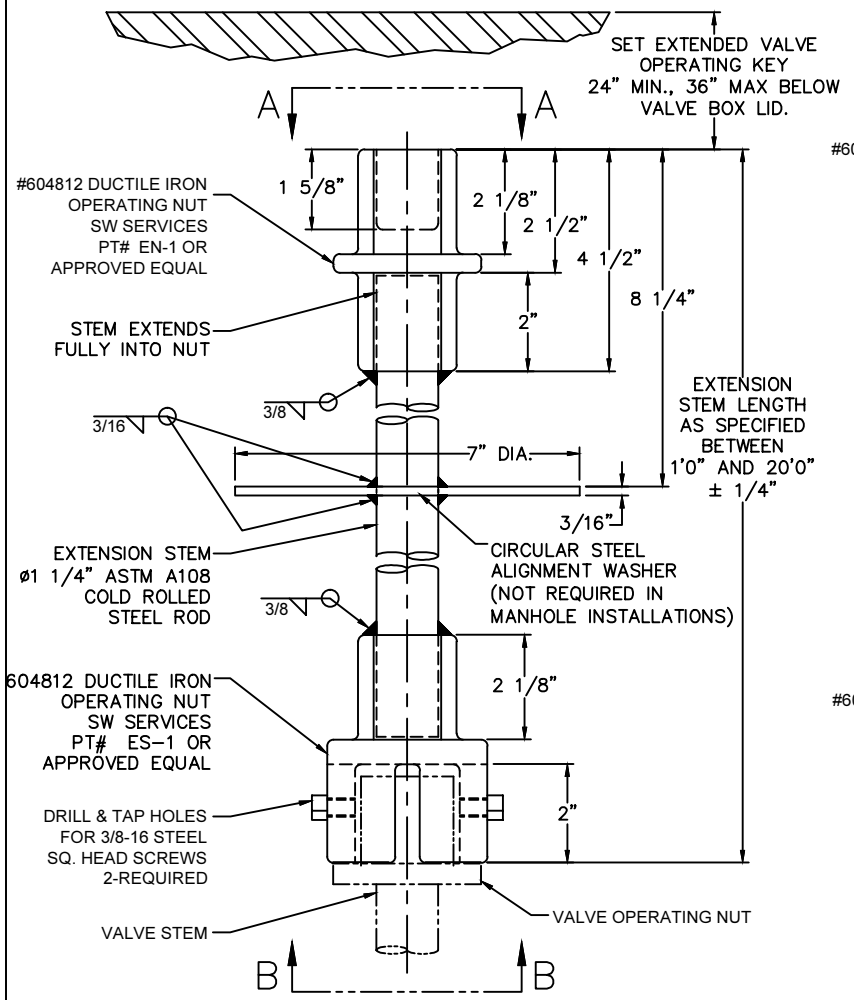

TYPE I
FOR USE WITH GATE VALVES UNDER 12" AND ALL BUTTERFLY VALVES

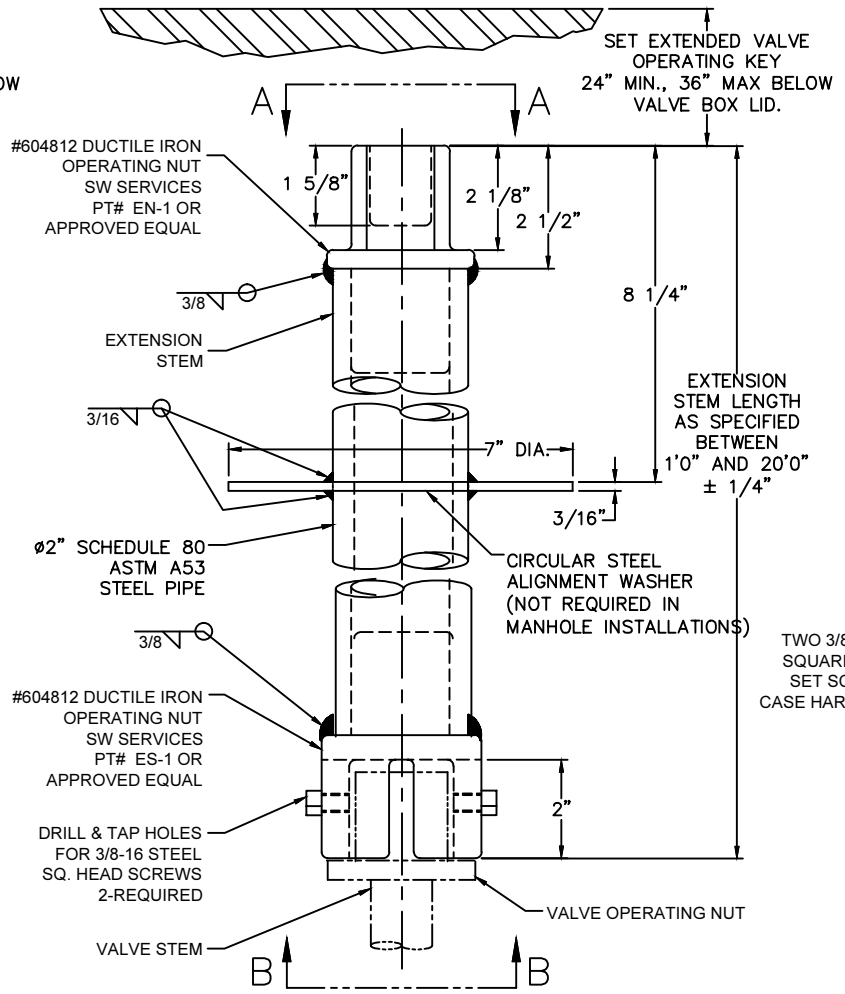

TYPE II
FOR USE WITH GATE VALVES 12" AND UP

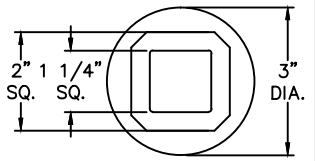

VIEW A–A

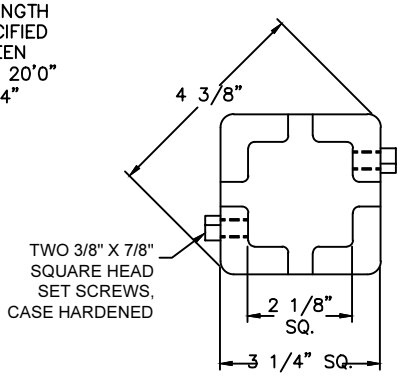

VIEW B–B

NOTE:

STEM PAINTING:
ALL STEEL TO HAVE PRIME COAT OF PAINT No. 1-D AND ONE HEAVY APPLICATION "FINISH COAT" OF PAINT No. 9 AS PER SECT. 790

DETAIL NO.	City of Phoenix STANDARD DETAIL	VALVE OPERATING NUT EXTENSION	APPROVED	DETAIL NO.
P1391–1			Mario Saldamando — CITY ENGINEER — 6/27/01 DATE	P1391–1

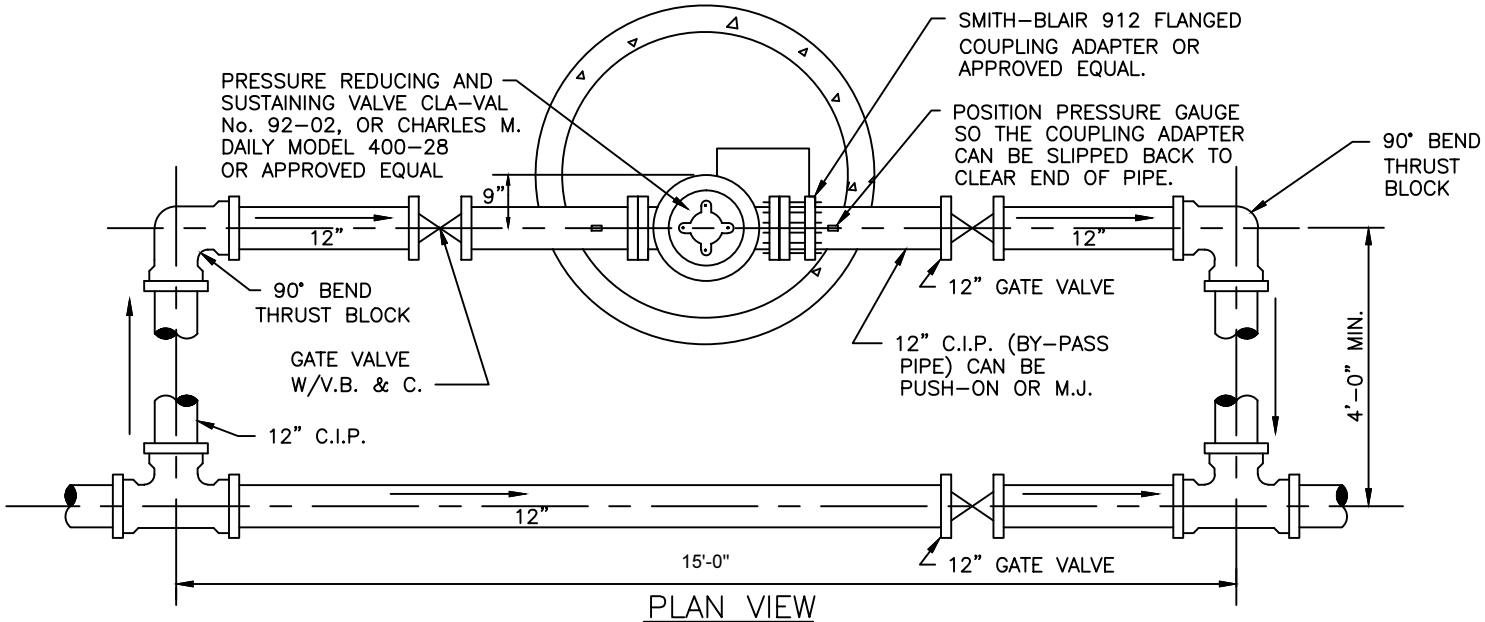

PLAN VIEW

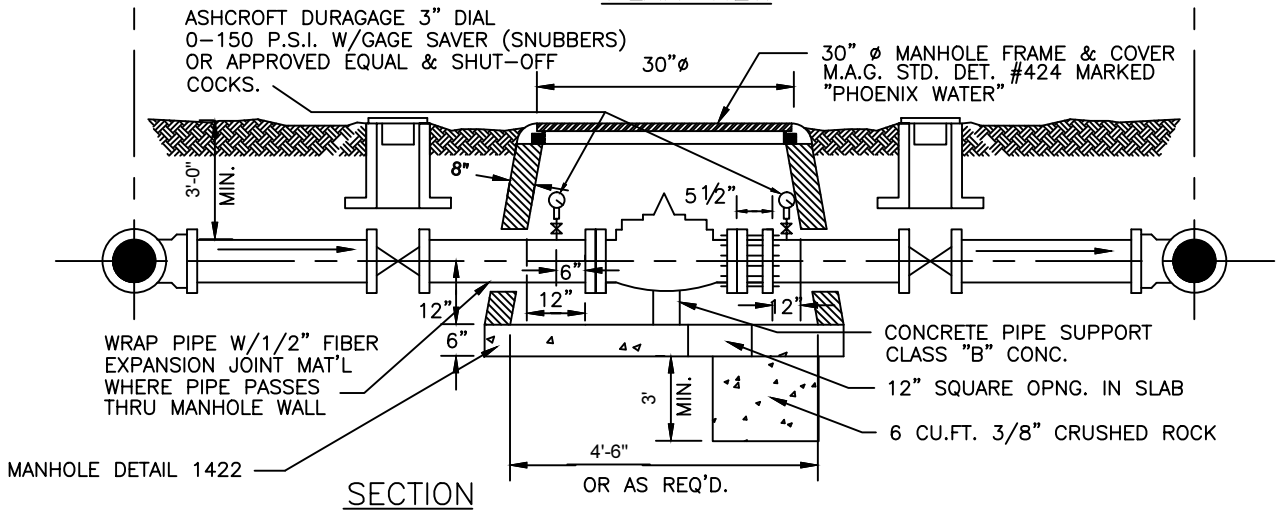

SECTION

NOTES:

1. VALVE SHALL BE IRON BODY, CLASS 125, FLANGED ENDS, HYDRAULICALLY OPERATED, PILOT CONTROLLED, DIAPHRAGM TYPE, GLOVE PATTERNED VALVE. IT SHALL BE TREATED AT 175 P.S.I. MINIMUM PRESSURE.
2. MANUFACTURERS NAME, YEAR OF MANU–FACTURE, SIZE OF VALVE AND GUARANTEED WORKING PRESSURE SHALL BE ENGRAVED ON THE VALVE OR ON A NAMEPLATE ATTACHED TO THE VALVE.
3. VALVE SHALL BE OPERATED BY A CONTROL SYSTEM WHICH INCLUDES PILOT CONTROLS FOR PRESSURE REDUCING AND FOR PRESSURE SUSTAINING. BOTH PILOT CONTROLS SHALL BE FIELD ADJUSTABLE FOR ANY PRESSURE IN THE RANGE OF 50–120 P.S.I.

DETAIL NO.	City of Phoenix STANDARD DETAIL	PRESSURE REDUCING & SUSTAINING VALVE	APPROVED	DETAIL NO.
P1394			Kenny W Harris CITY ENGINEER — 7/9/92 DATE	P1394

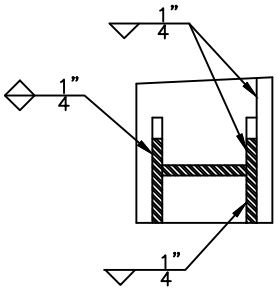

SECTION X–X

PIPE SIZE	A	B
8"	8"	15"
10"	9"	17"
12"	10"	19"

NOTES:

1. MINIMUM 2 SUPPORTS PER JOINT OF PIPE.
2. ALL NUTS SHALL BE STAINLESS STEEL SERIES 8–18.
3. ALL BOLTS SHALL HAVE A LOCK WASHER UNDER THE NUT.

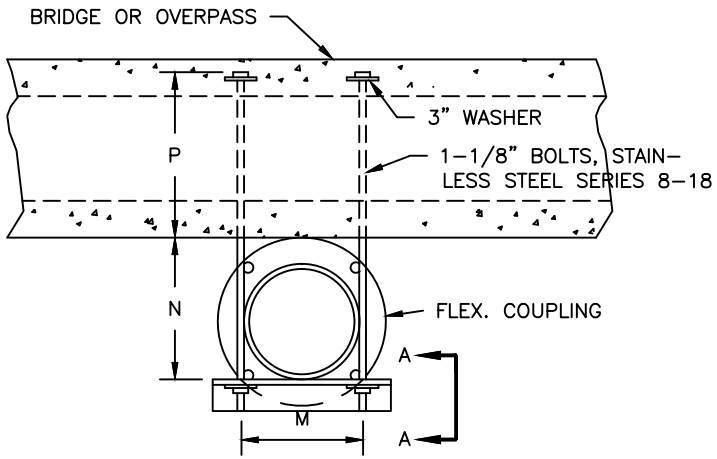

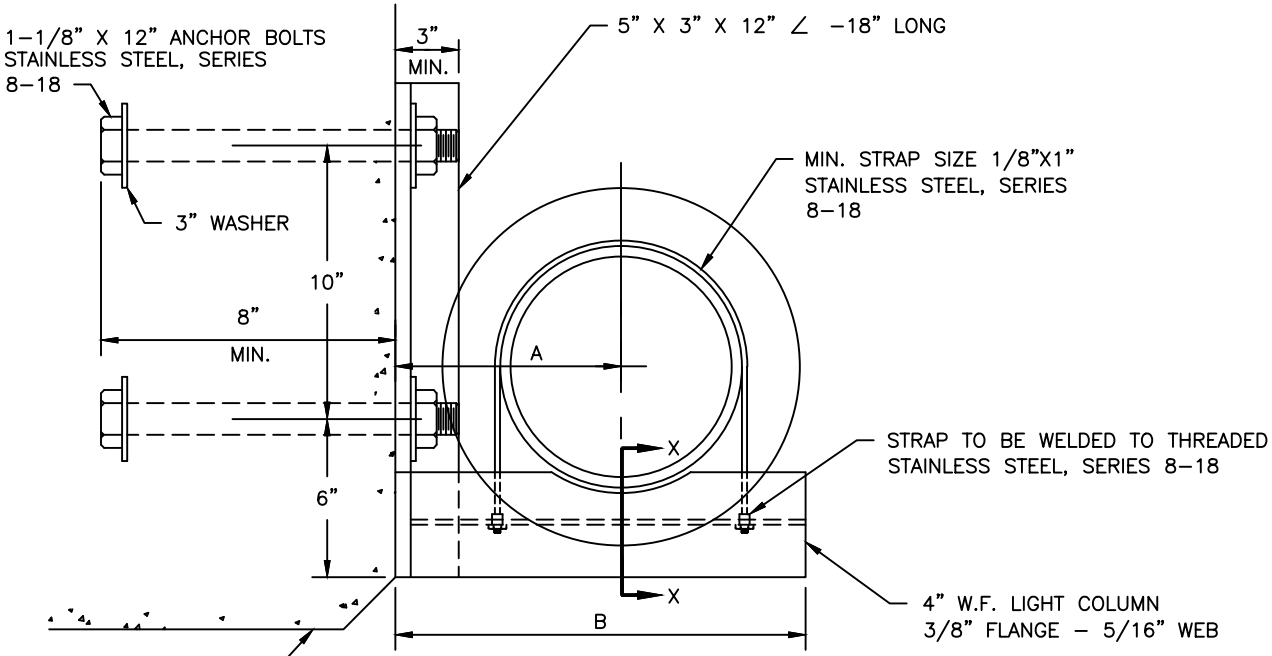

SIDE SUSPENSION

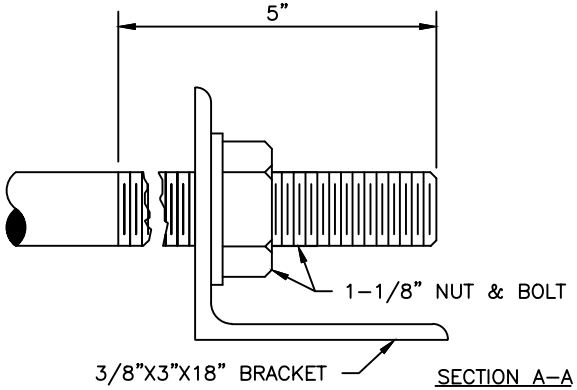

SECTION A–A

PIPE SIZE	M	N	P
8"	10.25"	12"	8"
10"	12.5"	14"	8"
12"	15"	16"	8"

BOTTOM SUSPENSION

DETAIL NO.	City of Phoenix STANDARD DETAIL	WATER LINE SUSPENSION	APPROVED CITY ENGINEER 7/9/92 DATE	DETAIL NO.
P1395				P1395

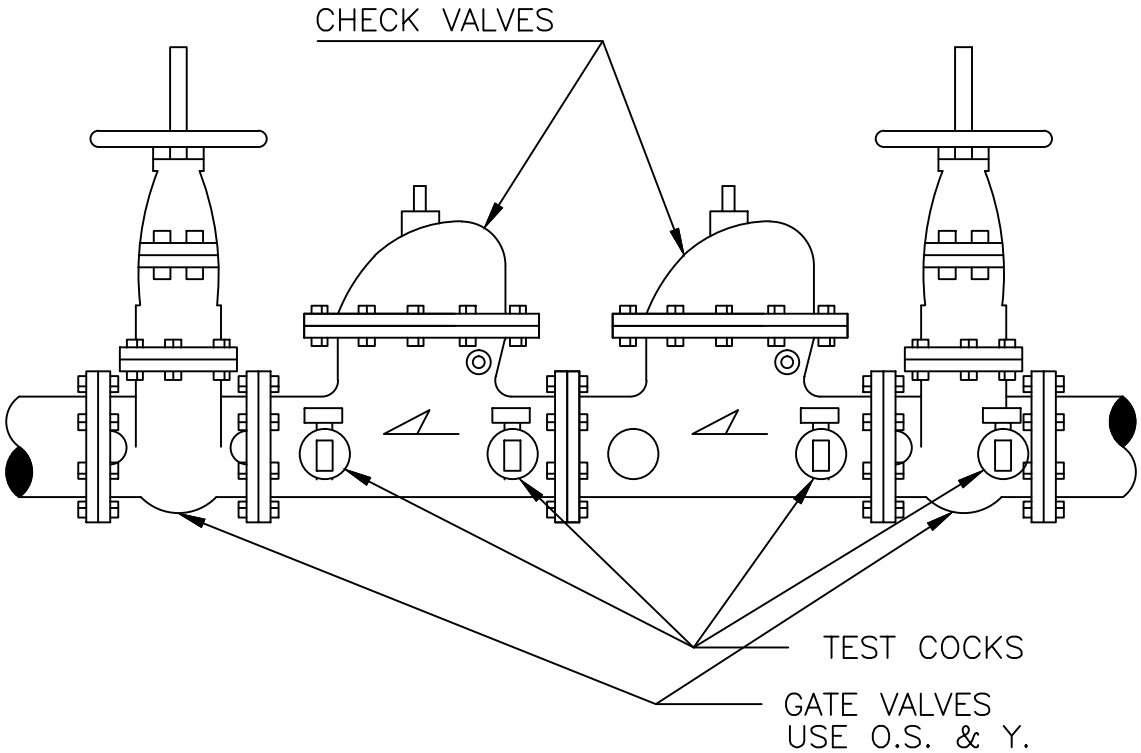

NOTES:

1. THE CHECK VALVE SHALL BE LOADED INTERNALLY SO THAT WHEN THE SUPPLY PRESSURE IS 1 P.S.I., AND THE OUTLET PRESSURE IS ATMOSPHERIC, EACH CHECK VALVE WILL BE DRIP–TIGHT IN THE NORMAL DIRECTION OF FLOW.
2. CLAPPER FACING RINGS SHALL BE MOLDED SYNTHETIC RUBBER (SHORE DUROMETER HARDNESS 35–45).
3. ASSEMBLY IS TO MEET A.W.W.A. STANDARD C 506, BACK FLOW PREVENTION DEVICES.
4. PLACEMENT & LOCATION OF DOUBLE CHECK VALVE ASSEMBLY SHALL BE APPROVED BY WATER & WASTEWATER DEPARTMENT.
5. TEST COCKS SHALL HAVE FEMALE ENDS (I.P. THREADS) ON DISCHARGE SIDE.

NOMINAL SIZE OF ASSEMBLY	MINIMUM SIZE TEST COCK
LESS THAN OR EQUAL TO 2"	1/4"
2 1/2" – 4"	1/2"
6" & OVER	3/4"

DETAIL NO.	City of Phoenix STANDARD DETAIL	DOUBLE CHECK VALVE ASSEMBLY	APPROVED CITY ENGINEER 7/9/92 DATE	DETAIL NO.
P1396				P1396

$\frac{7}{8}$" DIA. VENT HOLE

1 OPEN PICKSLOT

OPEN PICKSLOT

$\frac{7}{8}$" DIA. VENT HOLE

(2) CONCEALED PICKSLOTS

CONCEALED PICKSLOT

NOTES:

1. ALL LIDS AND FRAMES TO BE FURNISHED WITH MACHINED HORIZONTAL BEARING SURFACES.
2. MEET H–20 LOAD RATING REQUIREMENTS.
3. WATERTIGHT COVERS SHALL BE FURNISHED WITH T–GASKET IN FRAME OR COVER.
4. ADJUST WORDING TO "PHOENIX WATER," AS NECESSARY.
5. SEE MAG DETAIL NUMBERS: 423 &424 FOR ADDITIONAL REQUIREMENT.

NO VENT HOLE

(2) CONCEALED PICKSLOTS

WATERTIGHT

(4) $\frac{1}{2}$" X 2" HEX–HEAD S.S. BOLTS & WASHERS

NO VENT HOLE

(2) CONCEALED PICKSLOTS

BOLTDOWN WATERTIGHT

DETAIL NO.	City of Phoenix STANDARD DETAIL	24" & 30" MANHOLE COVERS	APPROVED CITY ENGINEER 12/10/2012 DATE	DETAIL NO.
P1424				P1424

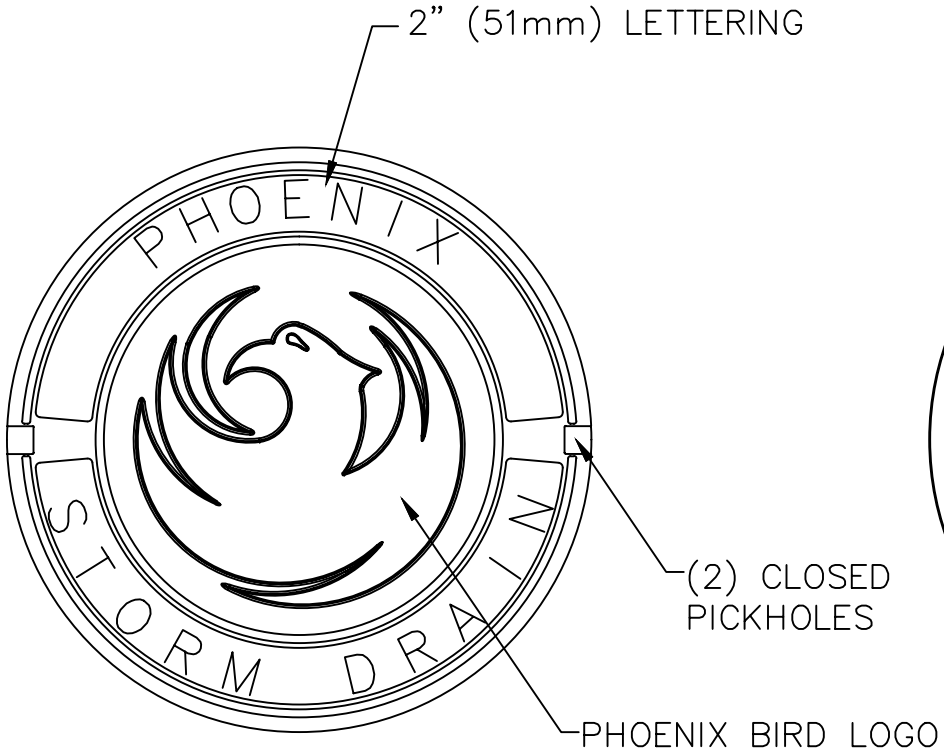

PLAN VIEW

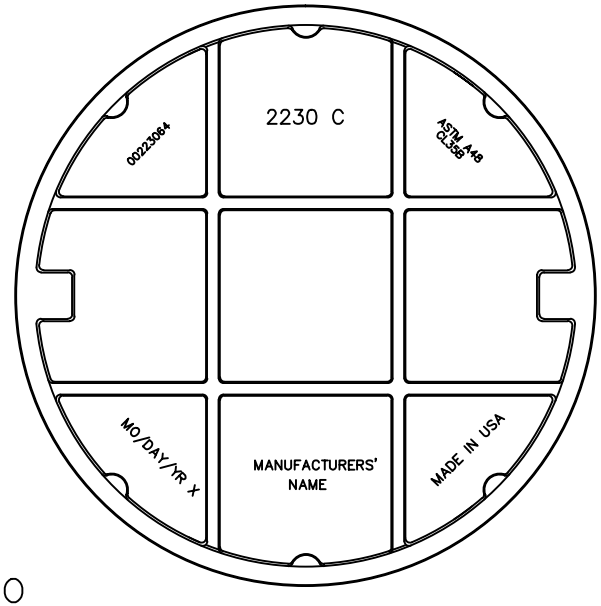

BOTTOM VIEW

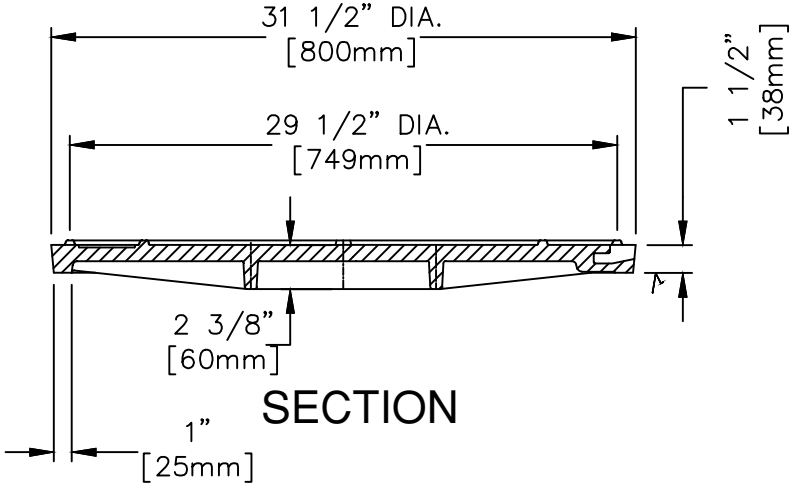

SECTION

NOTES:
Surface of Manhole Cover to be machined.

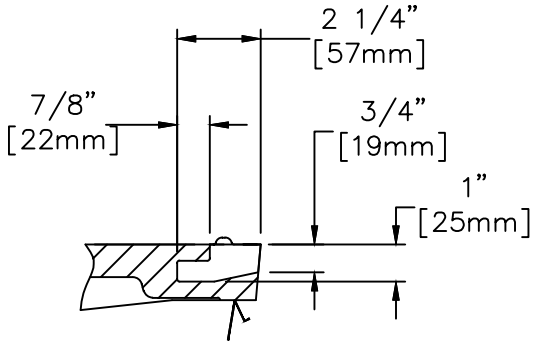

PICKHOLE DETAIL

DETAIL NO.	City of Phoenix STANDARD DETAIL	STORM DRAIN MANHOLE COVER	APPROVED CITY ENGINEER 07/01/2015 DATE	DETAIL NO.
P1424–1				P1424–1

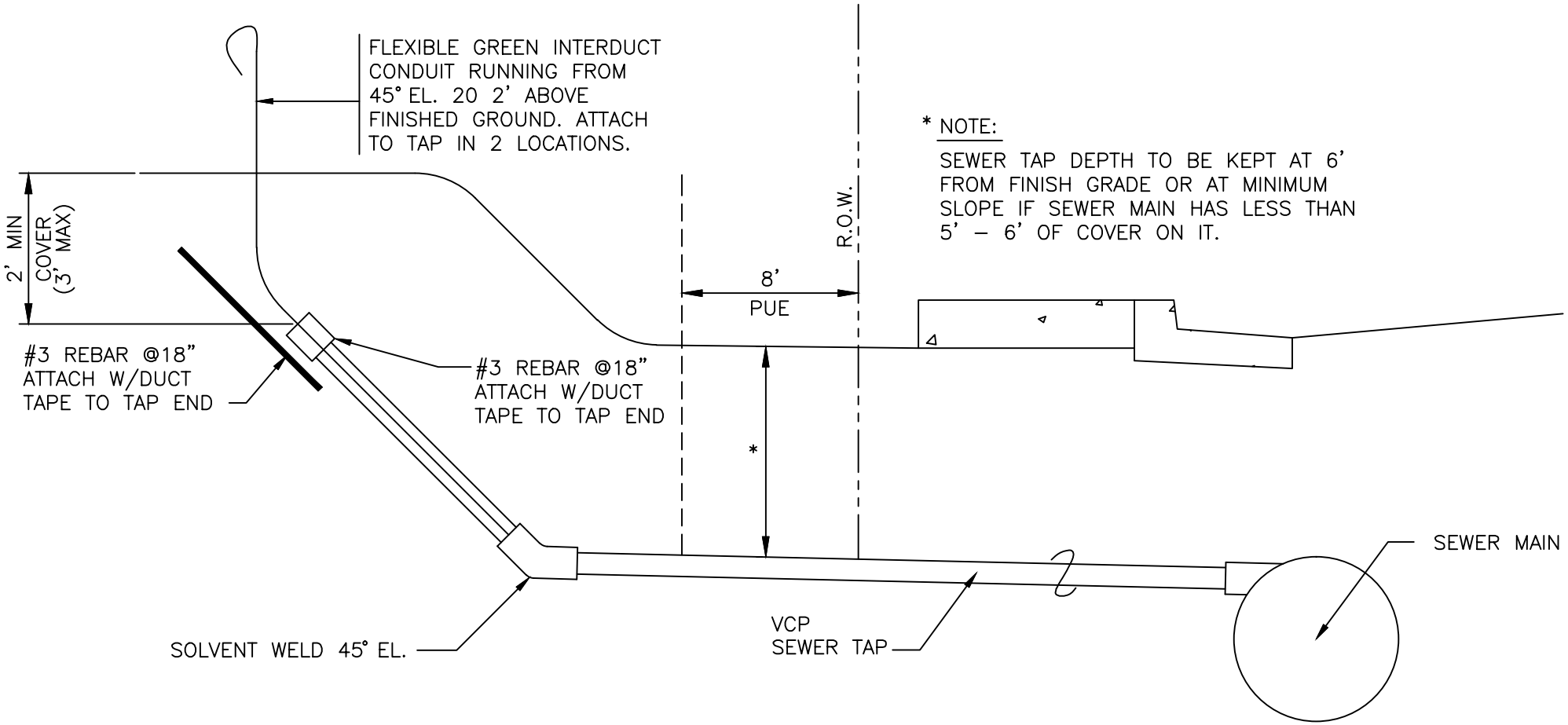

DETAIL NO.	City of Phoenix STANDARD DETAIL	SEWER TAP DEPTH & MARKING	APPROVED FOR CITY ENGINEER 8/6/99 DATE	DETAIL NO.
P1431				P1431

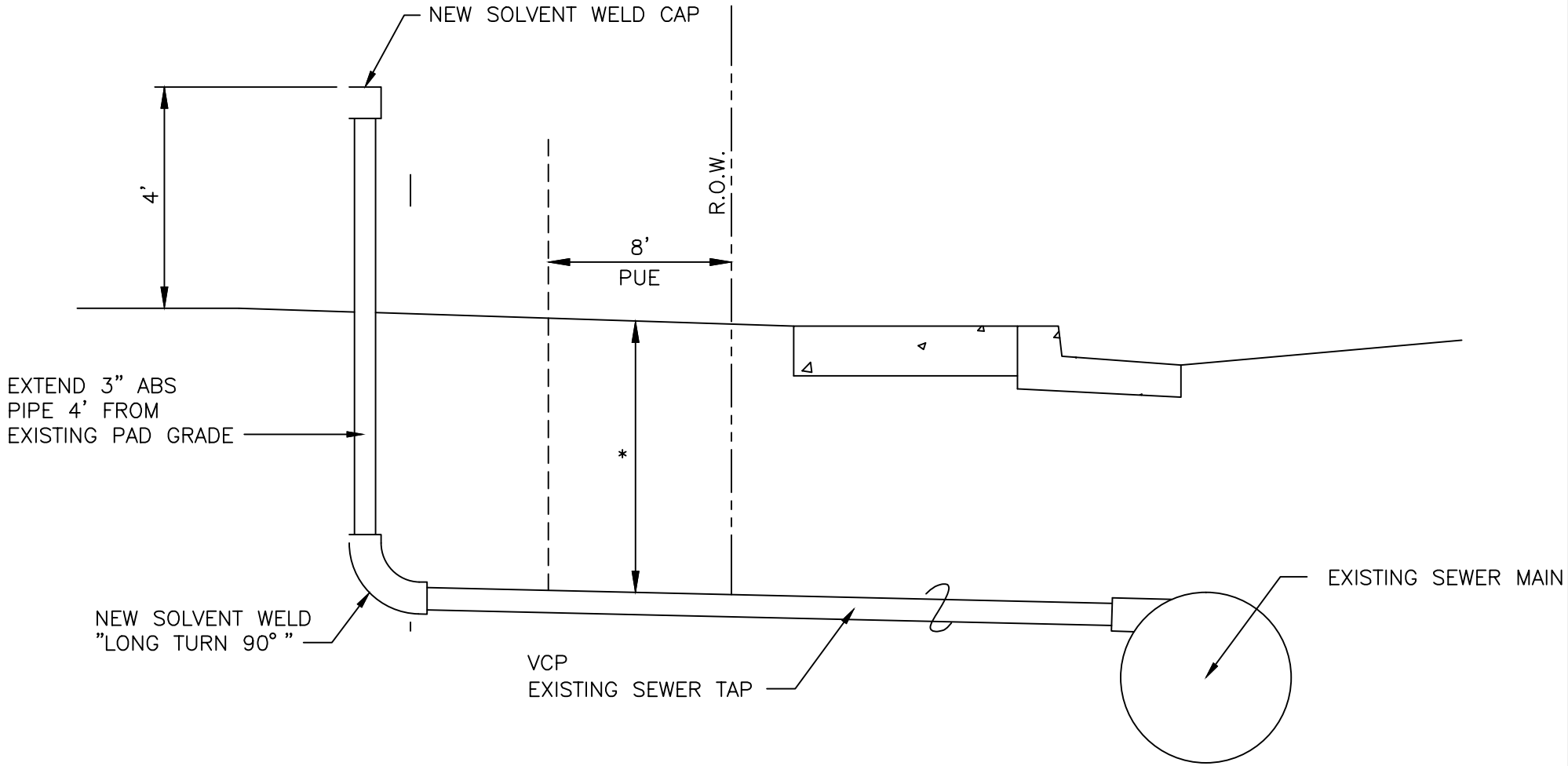

* NOTE:

HOME SEWER LINE WOULD TIE INTO NEW VERTICAL 3" ABS PIPE APPROXIMATELY 2' – 3' BELOW PAD GRADE. CLEAN OUT CAP WOULD ALSO BE PROVIDED AT TOP OF VERTICAL PIPE. (NEW PERMIT REQUIRED) APPROXIMATELY 2' – 3' BELOW

DETAIL NO.	City of Phoenix STANDARD DETAIL	SEWER TAP RETROFITTING	APPROVED FOR CITY ENGINEER 8/6/99 DATE	DETAIL NO.
P1432				P1432

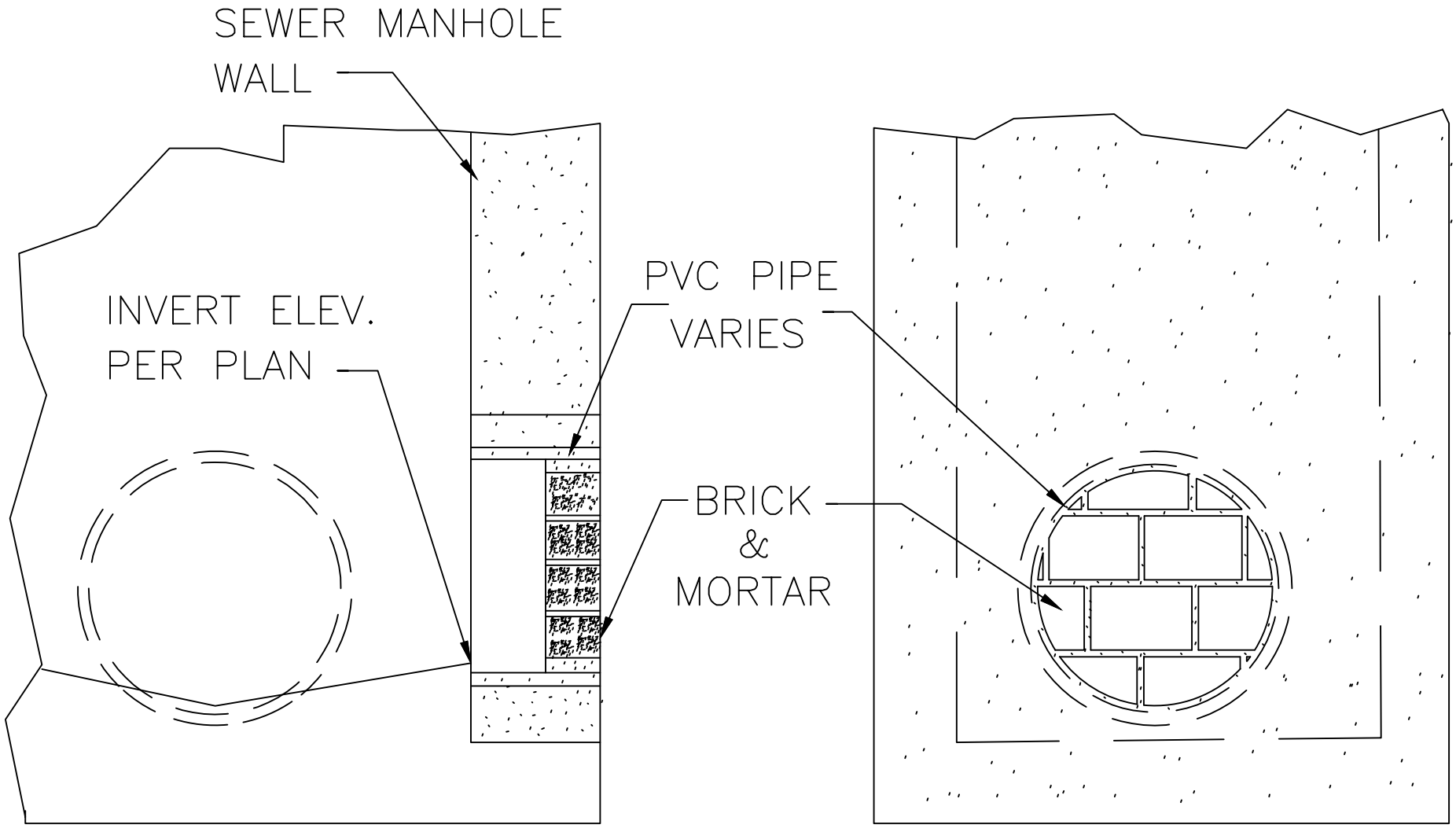

NOTE:

1) FOR FUTURE VCP or DUCTILE IRON PIPE INSTALLATION.
2) THE PVC DIAMETER SHALL BE THE NEXT SIZE LARGER (2" MINIMUM) THAN THE PROPOSED FUTURE PIPE CONNECTION.

DETAIL NO.	City of Phoenix STANDARD DETAIL	SANITARY SEWER MANHOLE KNOCKOUT	APPROVED Mario Saldamando CITY ENGINEER 7/19/04 DATE	DETAIL NO.
P1435				P1435

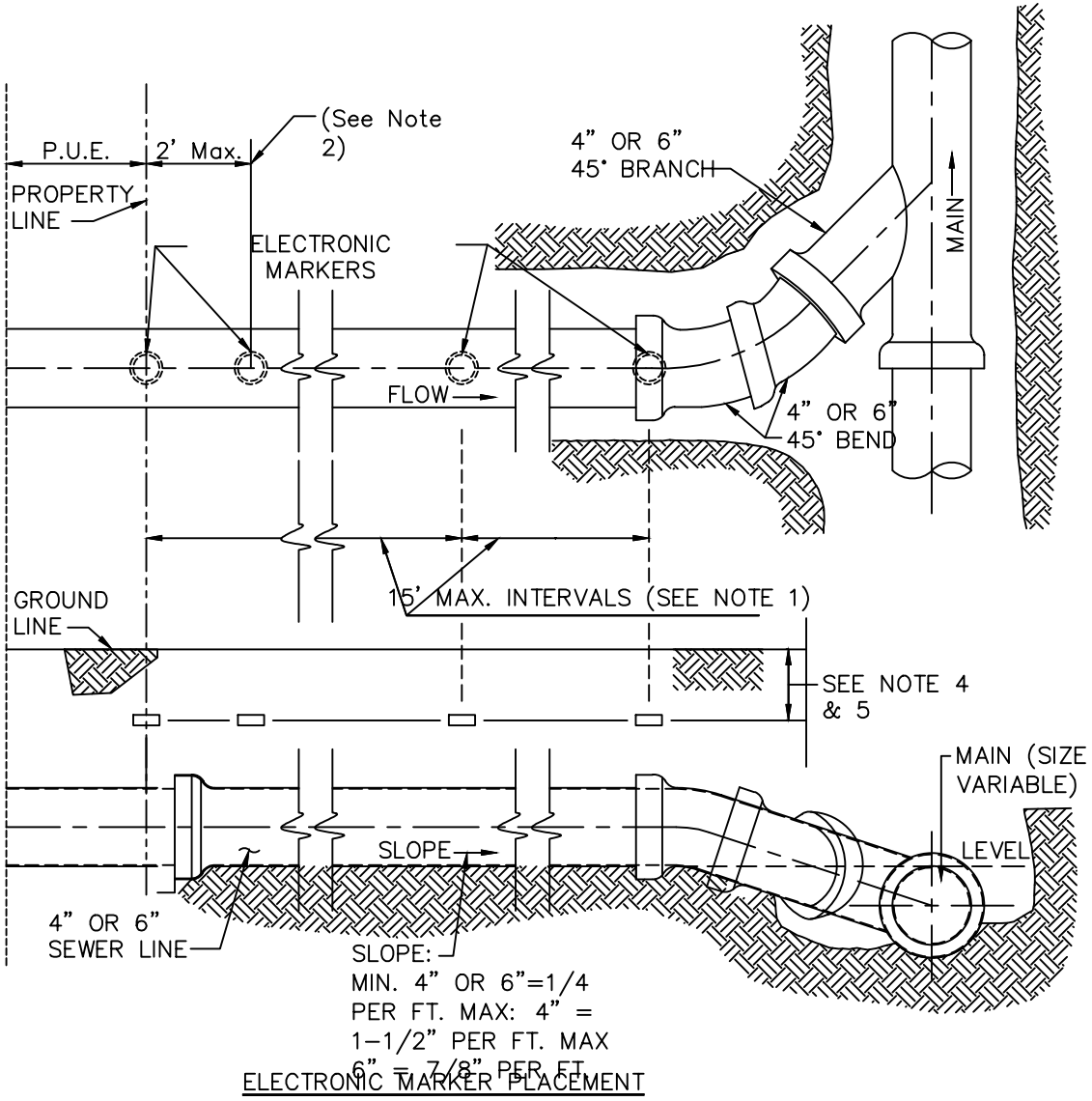

ELECTRONIC MARKER PLACEMENT

NOTES:

1. Electronic markers shall be installed at the tap, at the property line and at all changes in horizontal direction, if any, over all building connection sewers. Additional markers shall be installed as necessary so that maximum spacing between markers shall not exceed 15 feet.
2. Markers at property line may be installed at up to 2 feet from property line into right-of-way if a fence or other obstruction is anticipated to be constructed on property line.
3. Markers shall be 3M 1253 Full Range (potty seats) capable of detection at up to 8 feet of bury, or equal.
4. Markers shall be installed in a horizontal position centered over the sewer with a 6-inch cushion of soil between pipe and marker when building sewer is 8 feet or less in depth to finish grade.
5. If building connection sewer has over 8 feet of cover, marker shall be positioned over center of sewer and buried at 7 to 8 feet of depth from finish grade.
6. Backfill material within 6-inches of any marker shall sand or well graded material with a maximum aggregate size of 1-inch.
7. Construct building connection sewer at minimum slope if cover will be less than 5 feet at the property line.
8. Aside from wye connection at tap, vertical adjustments of the building connection are not allowed in the right-of-way.
9. All fittings shall be installed in accordance with ASTM D-2321. The Contractor may vary from the drawing to use the appropriate wyes and bends to ensure no misalignment of the pipe and fittings. Joints deflections shall not exceed more than one half of manufacturer's recommendations.
10. End of building connection sewer at property line shall be sealed and marked with 2"x 4" stake extending a minimum of 2 feet above finish grade. The top six inches of the stake shall be painted green.
11. A curb stamp shall be provided per MAG Detail 440-4.

DETAIL NO.	City of Phoenix STANDARD DETAIL	SEWER BUILDING CONNECTION & ELECTRONIC MARKERS	APPROVED CITY ENGINEER 12/10/2012 DATE	DETAIL NO.
P1440				P1440

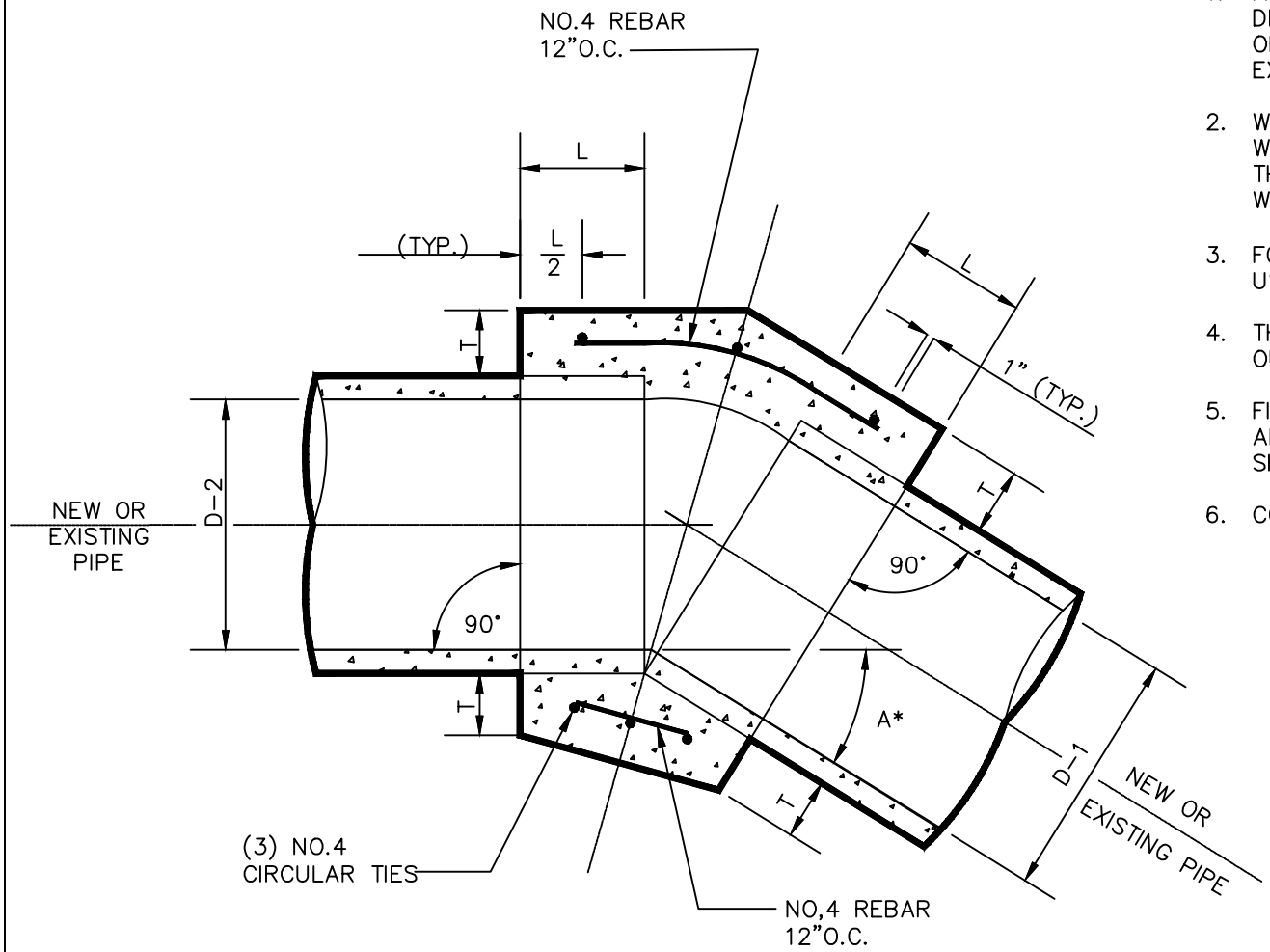

NOTES:

1. A CONCRETE COLLAR IS REQUIRED WHERE PIPES OF DIFFERENT DIAMETERS OR MATERIALS ARE JOINED, OR WHERE THE CHANGE IN ALIGNMENT OR GRADE EXCEEDS THAT ALLOWED FOR, ON ORDINARY JOINTS.
2. WHERE PIPES OF DIFFERENT DIAMETERS ARE JOINED WITH A CONCRETE COLLAR, L AND T SHOULD BE THOSE OF THE LARGER PIPE, D–D–1, OR D–2 WHICHEVER IS GREATER.
3. FOR PIPE SIZES NOT LISTED AND LESS THAN 66' USE NEXT SIZE LARGER.
4. THE DIAMETER OF THE CIRCULAR TIES SHALL BE OUTSIDE DIAMETER OF PIPE + T.
5. FIELD CLOSURES OF PIPE OF THE SAME DIAMETER AND WITHOUT CHANGE IN GRADE OR ALIGNMENT SHALL BE MADE WITH A CONCRETE COLLAR.
6. CONCRETE SHALL BE CLASS B PER SECT. 725.

* = ANGLE OF DEFLECTION

TABLE

D	L	T
12"	1.0'	4"
18"	1.0'	5"
24"	1.0'	6"
36"	1.5'	8"
48"	1.5'	10"
57"	1.5'	10"
60"	1.75'	11"
66"	1.75'	11"

DETAIL NO.	City of Phoenix STANDARD DETAIL	CONCRETE PIPE COLLAR	APPROVED CITY ENGINEER 12/10/2012 DATE	DETAIL NO.
P1505				P1505

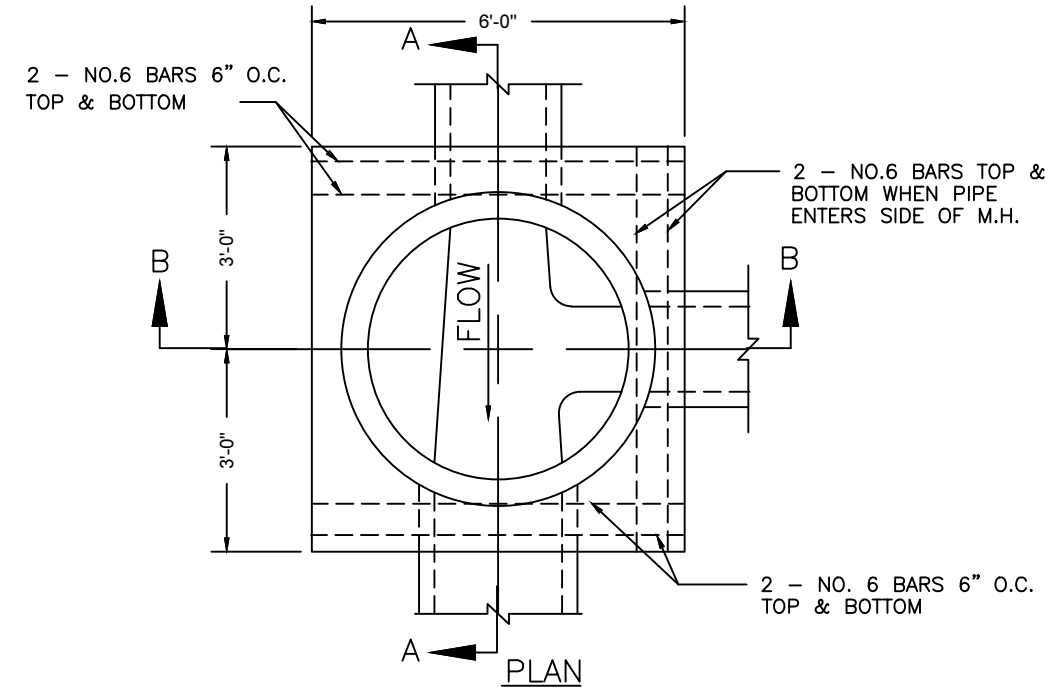

NOTES

1. ALL CONCRETE TO BE CLASS "A" PER SECTION 725.
2. MATCH SPRING LINES OF PIPES ENTERING M.H. UNLESS OTHERWISE NOTED.
3. CUT PIPED TO ALLOW SETTING OF 4' DIA. CYLINDRICAL FORM FROM 6" ABOVE MAIN LINE PIPE TO SPRING LINE. CUT PIPE 2" LARGER THAN FORM TO ALLOW 2" CONC. OVER ENDS OF ALL CUT PIPE.
4. INVERT AND BASE OF M.H. TO BE POURED AND INVERT TO BE SHAPED BY HAND TO MAKE SMOOTH TRANSITION FINISH WITH RUBBER FLOAT.
5. CENTER M.H. ON PIPE JOINT WHERE PIPE CHANGES SIZES.
6. BENCH M.H. BASE TO TOP OF LARGEST PIPE.

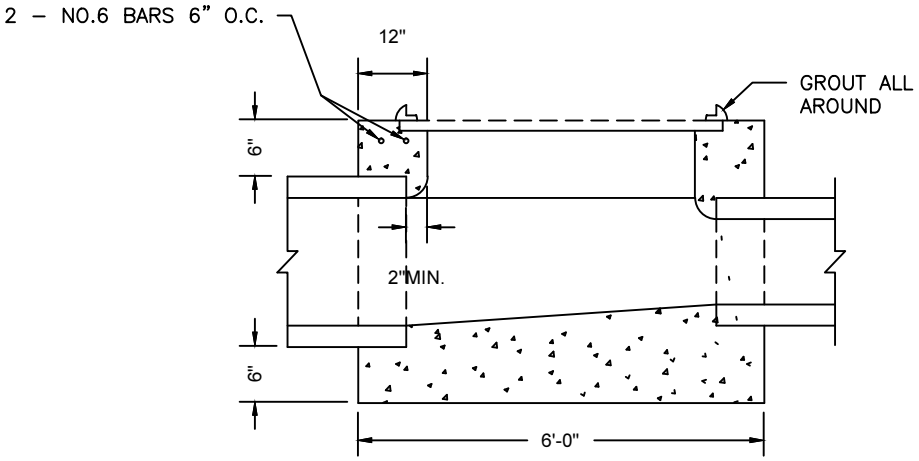

SECTION A–A

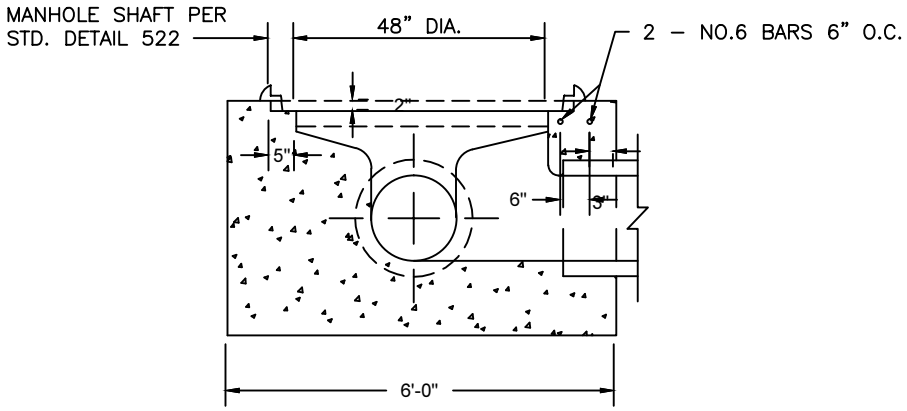

SECTION B–B

DETAIL NO.	City of Phoenix STANDARD DETAIL	STORM DRAIN MANHOLE BASE 48" & SMALLER	APPROVED CITY ENGINEER 7/9/92 DATE	DETAIL NO.
P1520				P1520

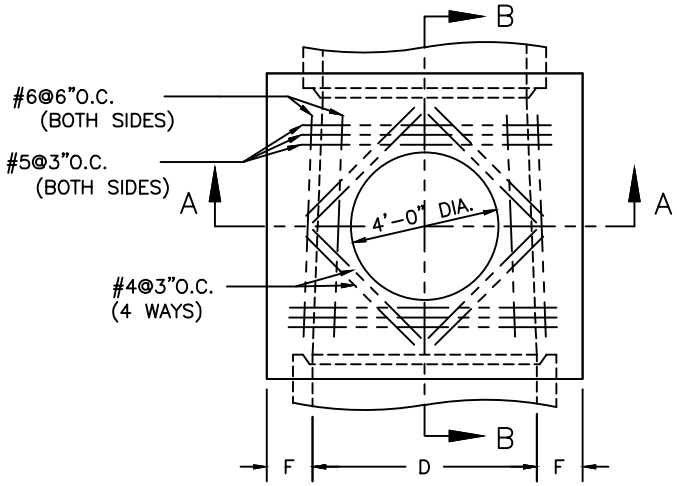

PLAN

NOTES:

1. THICKNESS OF DECK SHALL VARY WHEN NECESSARY TO PROVIDE LEVEL PIPE SEAT BUT SHALL NOT BE LESS THAN 'F'.
2. FLOOR OF MANHOLE SHALL BE STEEL TROWELLED TO SPRING LINE.
3. BODY OF MANHOLE SHALL BE POURED IN ONE CONTINUOUS OPERATION, EXCEPT THAT A CONSTRUCTION JOINT WITH A LONGITUDINAL KEYWAY MAY BE PLACED AT THE SPRING LINE.
4. ALL REINFORCED STEEL SHALL CLEAR FACE OF CONCRETE BY 1-1/2" UNLESS SHOWN OTHERWISE.
5. CONCRETE SHALL BE CLASS 'A'.

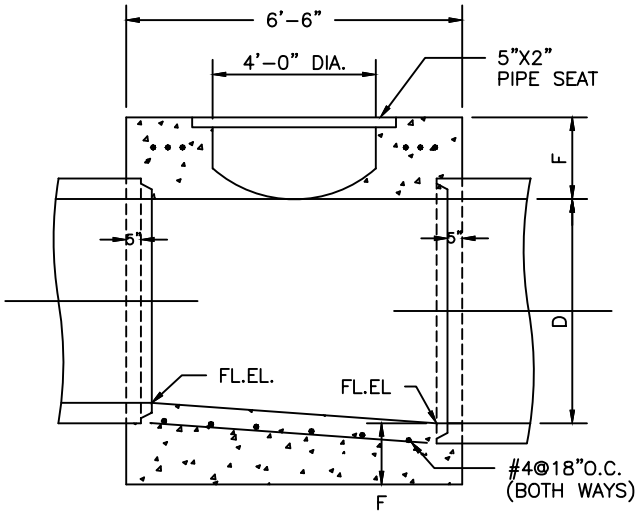

SECTION B-B

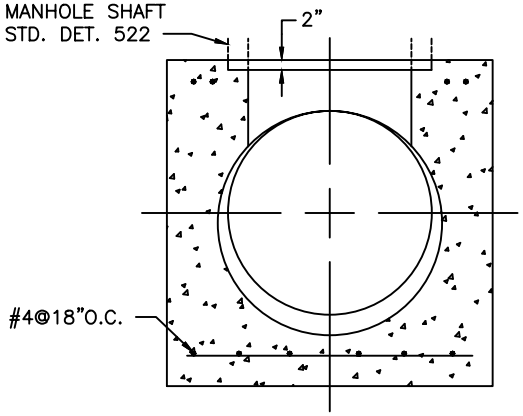

SECTION A-A

"F" DIMENSION TABLE

D	51"	54"	57"	60"	63"	66"
F	13-3/4"	14-1/2"	15"	15-1/2"	16-1/4"	16-3/4"
D	69"	72"	78"	84"	90"	96"
F	17-1/2"	18"	19-1/4"	20-1/2"	21-3/4""	23"

DETAIL NO.	City of Phoenix STANDARD DETAIL	STORM DRAIN MANHOLE BASE TRANSITION 51" & LARGER	APPROVED CITY ENGINEER 07/01/2015 DATE	DETAIL NO.
P1560				P1560

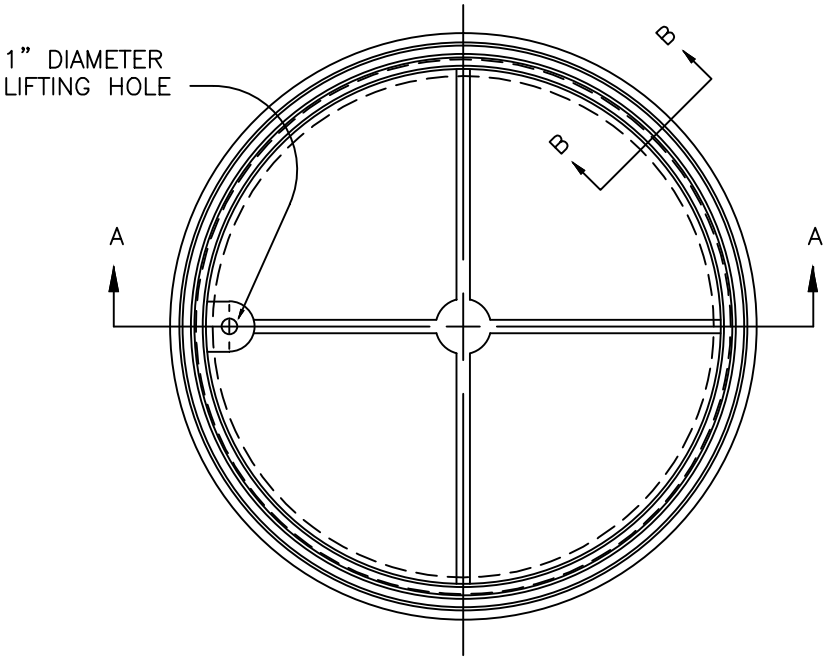

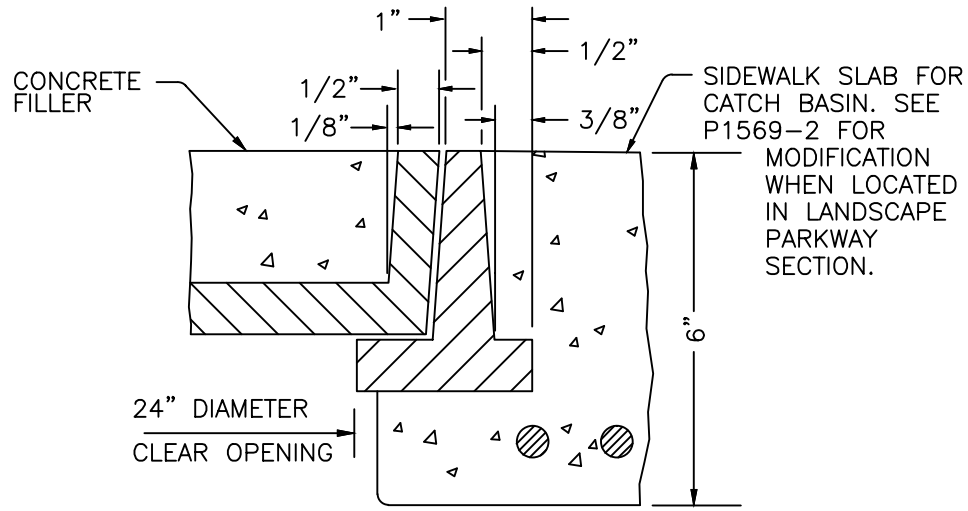

SECTION B – B

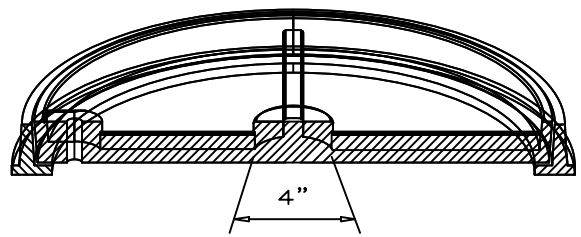

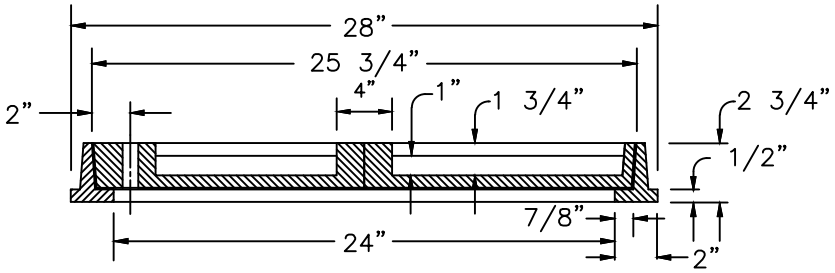

SECTION A – A

NOTES

1. COVER SHALL BE NON–LOCKING.
2. FRAME AND COVER SHALL BE CAST IRON OR STRUCTURAL STEEL.
3. CATCH BASIN ACCESS FRAME AND COVER IS FOR USE ON NON VEHICULAR TRAFFIC AREAS ONLY.
4. COVER SHALL BE FILLED WITH CONCRETE AND BROOM FINISHED.
5. SMALL VARIATIONS IN DIMENSIONS OR FEATURES OF A MINOR NATURE THAT ARE PART OF THE FOUNDRY'S STANDARD CASTING ARE PERMISSIBLE.

DETAIL NO.	City of Phoenix STANDARD DETAIL	FRAME AND COVER CATCH BASIN ACCESS	APPROVED ACTING CITY ENGINEER 7/31/08 DATE	DETAIL NO.
P1561				P1561

SIZE OF OUTFALL CONDUIT	FRAME ANGLES	SHEAR PIN CLIP ANGLES	SHEAR PINS	ANCHOR BOLTS	HINGE PINS	HINGE ANGLES	HINGE STD. PIPE	HINGE TO FRAME WELDS	ANGLE TO FRAME WELDS	BARRIER BARS PLAIN	NO. OF EQUAL BARRIER BAR SPACES (HORIZ.)	NO. OF EQUAL BARRIER BAR SPACES (VERT.)	H (OUT TO OUT FRAME ANGLES)	W (OUT TO OUT FRAME ANGLES)	A	B
15"	2X2X1/4	4X4X1/4	1-1/8ø	5/8ø	1/2"ø	2X2X1/4	3/4"	1/8	1/8	1/2"ø	3	5	34"	20"	SINGLE HINGE CENTERED	
18"	2X2X1/4	4X4X1/4	1-1/8ø	5/8ø	1/2"ø	2X2X1/4	3/4"	1/8	1/8	1/2"ø	3	5	34"	20"	SINGLE HINGE CENTERED	
24"	2X2X1/4	4X4X1/4	1-1/8ø	5/8ø	1/2"ø	2X2X1/4	3/4"	1/8	1/8	1/2"ø	3	5	34"	20"	SINGLE HINGE CENTERED	
30"	2X2X1/4	4X4X1/4	1-1/8ø	5/8ø	1/2"ø	2X2X1/4	3/4"	1/8	1/8	1/2"ø	3	5	34"	20"	SINGLE HINGE CENTERED	
36"	2X2X1/4	4X4X1/4	2-1/8ø	5/8ø	1/2"ø	2X2X1/4	3/4"	1/8	1/8	1/2"ø	5	5	42"	32"	SINGLE HINGE CENTERED	
42"	2X2X1/4	4X4X1/4	2-1/8ø	5/8ø	1/2"ø	2X2X1/4	3/4"	1/8	1/8	1/2"ø	5	6	42"	32"	2 HINGES 0	0
48"	3X3X7/16	5X3X1/4	2-1/8ø	5/8ø	3/4"ø	2-1/2X 2-2X1/4	1"	1/8	1/8	1/2"ø	5	7	47"	38"	3"	1"
54"	3X3X7/16	5X3X1/4	2-1/8ø	5/8ø	3/4"ø	2-1/2X 2-2X1/4	1"	1/8	1/8	1/2"ø	6	8	54"	44"	5"	3"
60"	3X3X7/16	5X3X1/4	2-1/8ø	5/8ø	3/4"ø	2-1/2X 2-2X1/4	1"	1/8	1/8	1/2"ø	7	9	60"	50"	9"	4"
66"	3X3X7/16	5X3X1/4	2-1/8ø	5/8ø	3/4"ø	2-1/2X 2-2X1/4	1"	1/8	1/8	1/2"ø	8	10	66"	56"	11"	6"
72"	4X4X5/8	5X3X1/4	2-3/16ø	5/8ø	1"ø	3X3X3/8	1-1/4"	1/8	1/8	1/2"ø	9	11	73"	62"	15"	7"
78"	4X4X5/8	5X3X1/4	2-3/16ø	5/8ø	1"ø	3X3X3/8	1-1/4"	1/8	1/8	1/2"ø	10	11	79"	68"	17"	9"
84"	4X4X5/8	5X3X1/4	2-3/16ø	5/8ø	1"ø	3X3X3/8	1-1/4"	1/8	1/8	1/2"ø	11	13	86"	74"	21"	10"
90"	4X4X5/8	5X3X1/4	2-3/16ø	5/8ø	1"ø	3X3X3/8	1-1/4"	1/8	1/8	1/2"ø	12	13	92"	80"	23"	12"
96"	4X4X5/8	5X3X1/4	2-3/16ø	5/8ø	1"ø	3X3X3/8	1-1/4"	1/8	1/8	1/2"ø	12	14	98"	86"	29"	12"
108"																
120"																

DETAIL NO. P1562

City of Phoenix
STANDARD DETAIL

BARRIER SPECIFICATION SCHEDULE

APPROVED

Mario Saldamando — CITY ENGINEER — 8/8/03 DATE

DETAIL NO. P1562

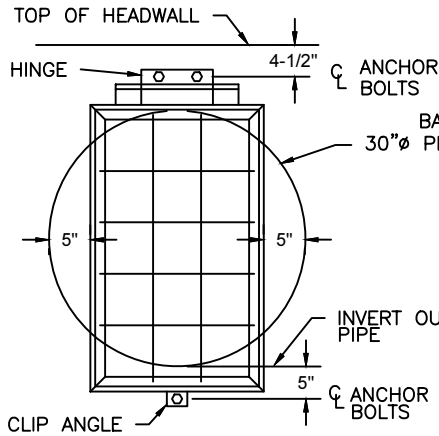

30"ø PIPE ONLY, SINGLE HINGE & CLIP ANGLE DETAIL

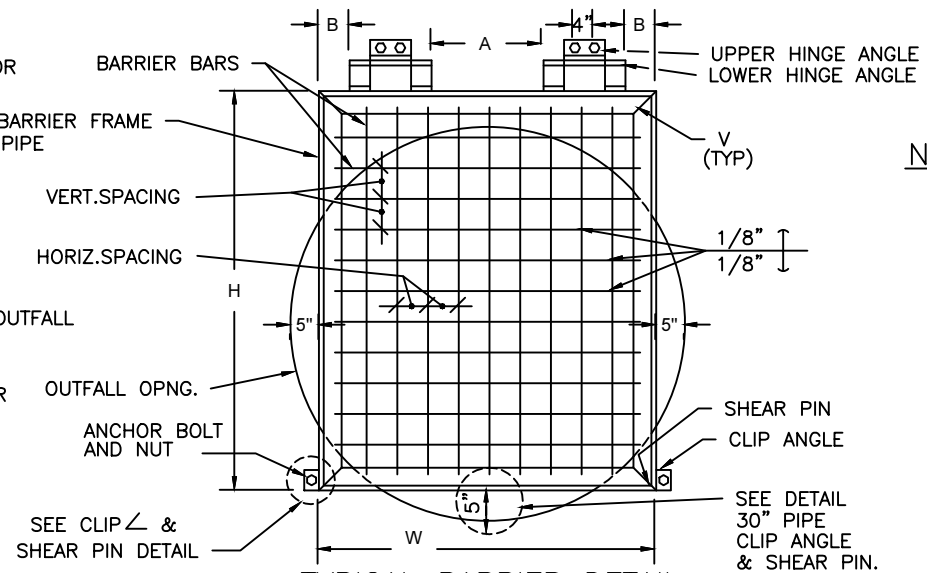

TYPICAL BARRIER DETAIL

NOTES:

1. ALL SHEAR PIN ANGLES SHALL FIT SNUGLY AND TRULY FACE TO FACE. COVER WITH WATERPROOF GREASE PRIOR TO INSTALLATION OF PIN.
2. GALVANIZE ALL FERROUS PARTS AFTER FABRICATION.
3. THE SHEAR PIN HOLES IN THE ANGLE SHALL BE DRILLED FOR A TIGHT FIT OF THE SHEAR PINS.
4. FRAME AND HINGE ANGLES SHALL HAVE THE OUTSTANDING LEGS OUT FOR OUTLETS.
5. ALL ANCHOR BOLTS SHALL BE 5/8"ø ANCHOR BOLTS EMBEDDED 4"(MIN.) INTO EPOXY GROUT.
6. ALL SHEAR PINS ARE TO BE PEENED BOTH ENDS AFTER INSTALLATION.
7. SHEAR PIN MATERIAL SHALL BE COMMERCIALLY PURE ALUMINUM WIRE, ALLOY 1100, TEMPER O, FEDERAL SPEC. QQ-A-411.
8. SEE BARRIER SCHEDULE, DET. P1562 FOR VARIABLE DIMENSIONS.
9. COVER ALL MOVABLE CONTACT SURFACE WITH A COAT OF WATERPROOF GREASE PRIOR TO INSTALLATION.

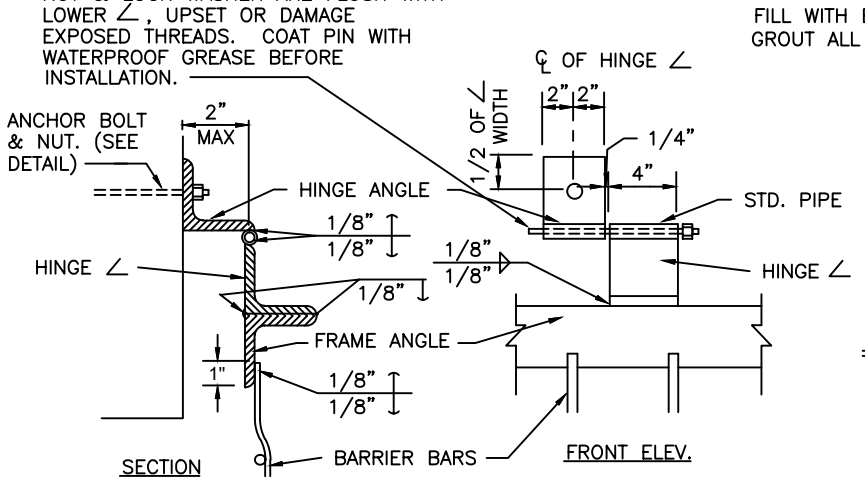

HINGE INSTALLATION DETAIL

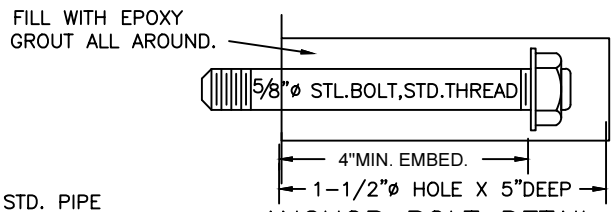

ANCHOR BOLT DETAIL

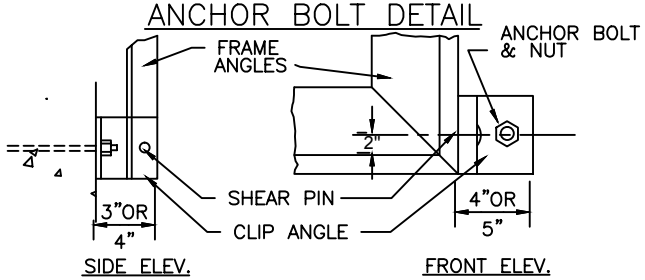

CLIP ANGLE & SHEAR PIN DETAIL

DETAIL NO.	City of Phoenix STANDARD DETAIL	STORM DRAIN OUTFALL ACCESS BARRIER	APPROVED CITY ENGINEER 07/01/2015 DATE	DETAIL NO.
P1563				P1563

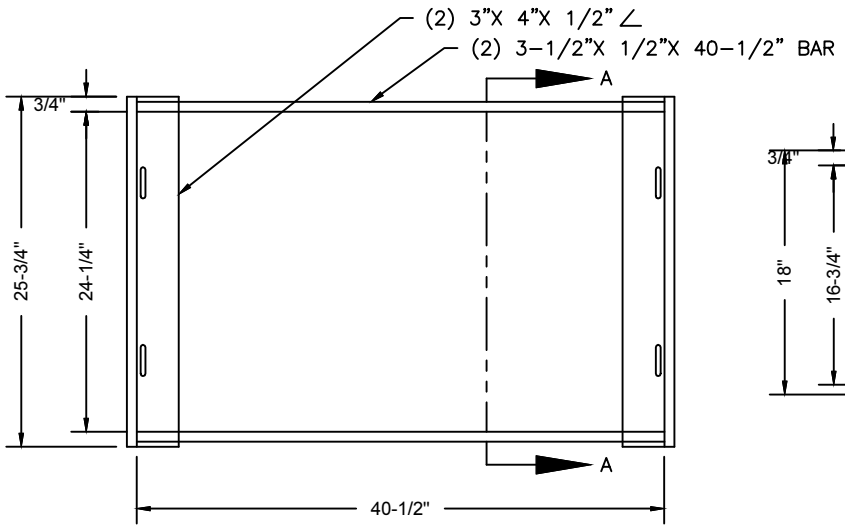

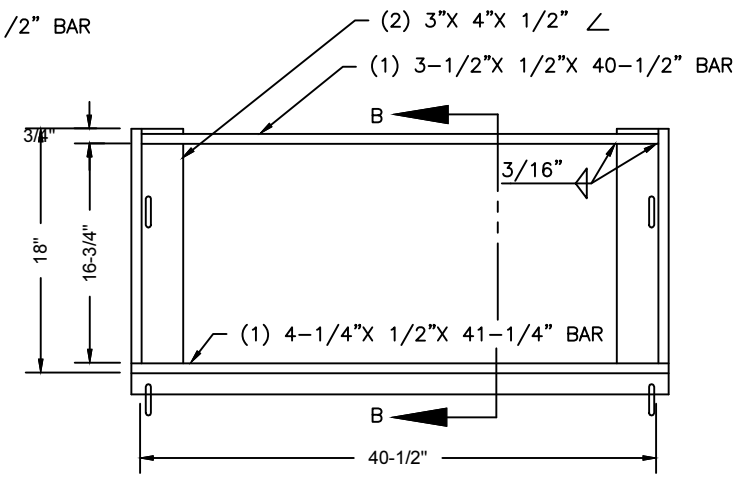

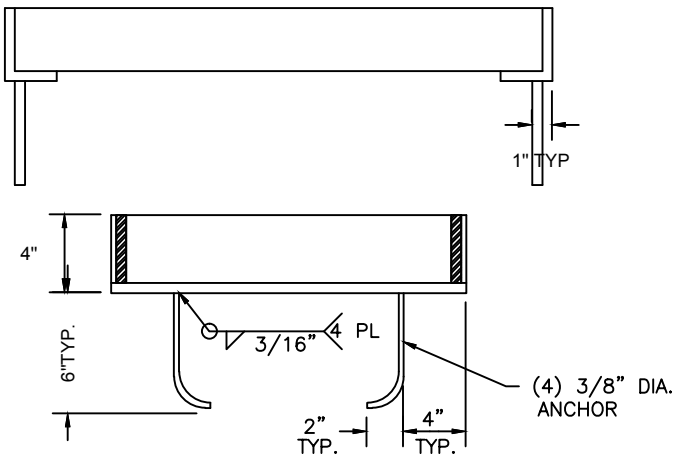

SECTION A–A
TYPE 1

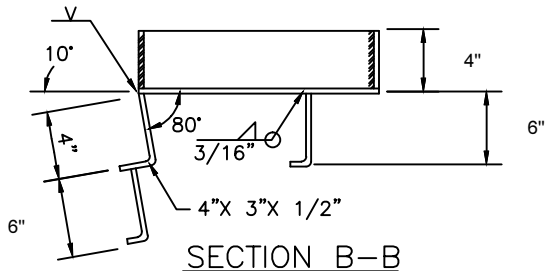

SECTION B–B
TYPE 2

NOTES

1. FRAME & FRAME SUPPORT SHALL BE FABRICATED FROM STRUCTURAL STEEL EXCEPT AS NOTED. STRUCTURAL STEEL SHALL BE IN ACCORDANCE WITH A.S.T.M. A–36.
2. WELDING SHALL BE IN ACCORDANCE WITH M.A.G. WELDING SPECIFICATIONS.
3. FRAME AND GRATE SHALL BE TESTED FOR ACCURACY OF FIT AND SHALL BE MARKED IN SETS BEFORE DELIVERY.
4. THE COMPLETED ASSEMBLY SHALL BE GIVEN ONE SHOP COAT OF NO. 1 PAINT, AND TWO FIELD COATS OF NO. 10 PAINT AS PER SECTION 790.
5. THE FRAME SHALL BE FABRICATED TO WITHIN ± 1/8" OF SPECIFIED DIMENSIONS.

DETAIL NO.	City of Phoenix STANDARD DETAIL	CATCH BASIN GRATE FRAMES	APPROVED	DETAIL NO.
P1564			CITY ENGINEER — DATE 7/9/92	P1564

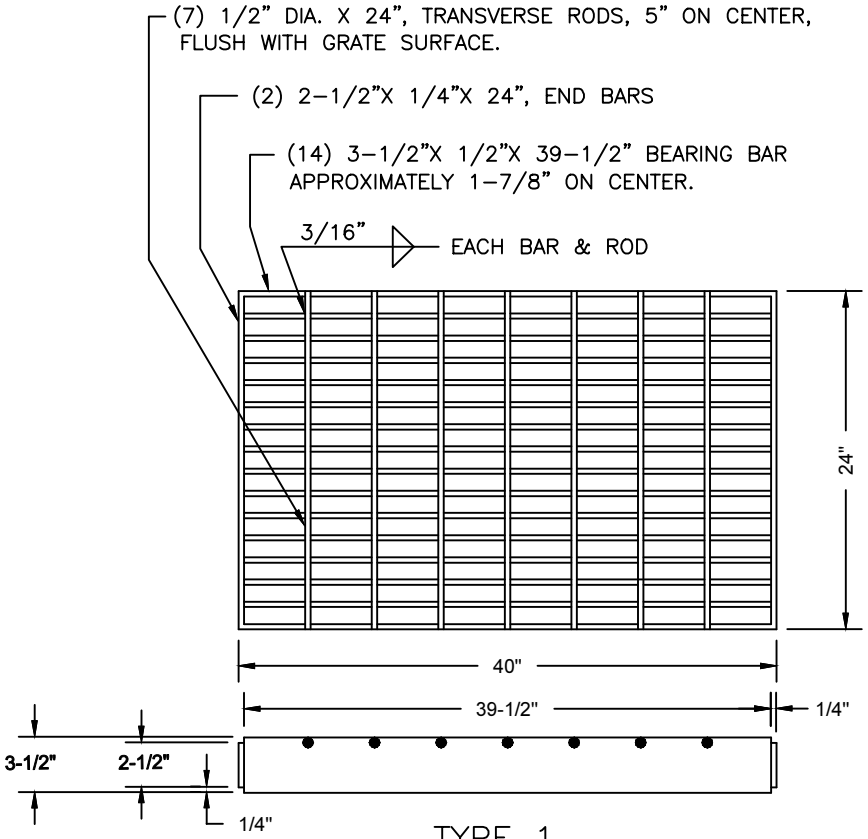

TYPE 1

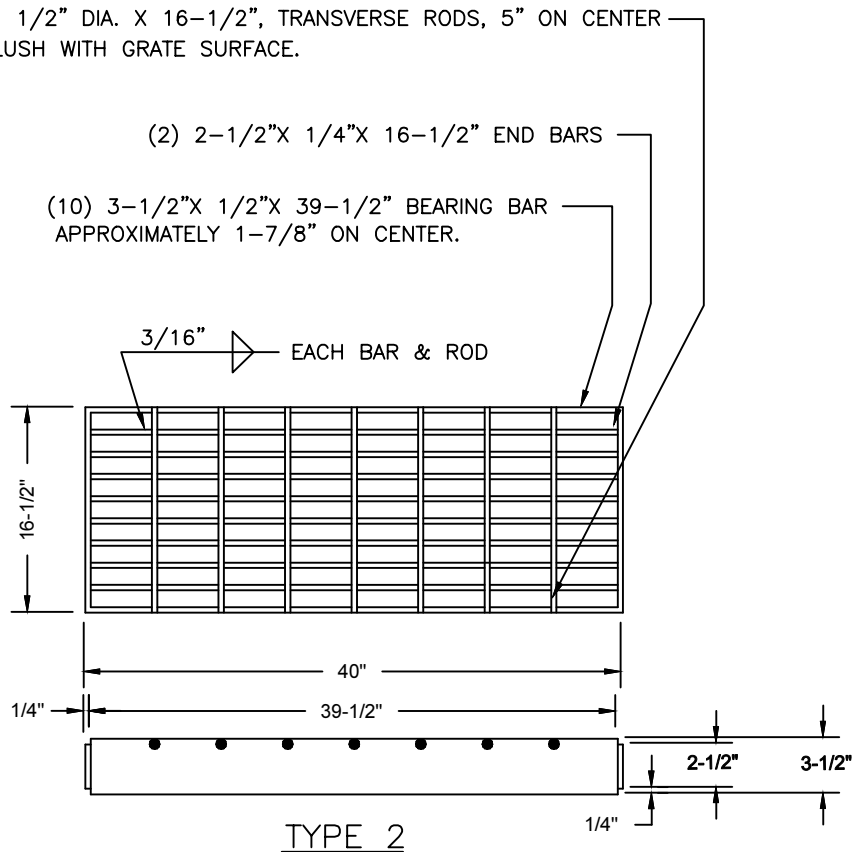

TYPE 2

NOTES:

1. ALL STEEL SHALL BE IN ACCORDANCE WITH A.S.T.M. A-36.
2. WELDING SHALL BE IN ACCORDANCE WITH A.W.S. SPECIFICATIONS.
3. FRAME AND GRATE SHALL BE TESTED FOR ACCURACY OF FIT AND SHALL BE MARKED IN SETS BEFORE DELIVERY.
4. THE COMPLETED ASSEMBLY SHALL BE GIVEN ONE SHOP COAT OF NO. 1 PAINT AND TWO FIELD COATS OF NO. 10 PAINT AS PER SECTION 790.
5. THE GRATE SHALL BE FABRICATED TO WITHIN 1/8" OF SPECIFIED DIMENSIONS.
6. TYPE 1 AND TYPE 2 GRATES, INSTALLED IN GRATE FRAMES PER STANDARD DETAIL P1564, ARE BICYCLE FRIENDLY AND MAY BE USED WITHIN BICYCLE FACILITIES WITH BEARING BARS ORIENTED PARALLEL TO THE DIRECTION OF TRAVEL.
7. TYPE1 AND TYPE 2 GRATES ARE NOT PEDESTRIAN FRIENDLY AND SHALL NOT BE USED IN PEDESTRIAN TRAVELED WAYS.

DETAIL NO.	City of Phoenix STANDARD DETAIL	CATCH BASIN GRATES	APPROVED CITY ENGINEER 07/01/2015 DATE	DETAIL NO.
P1565				P1565

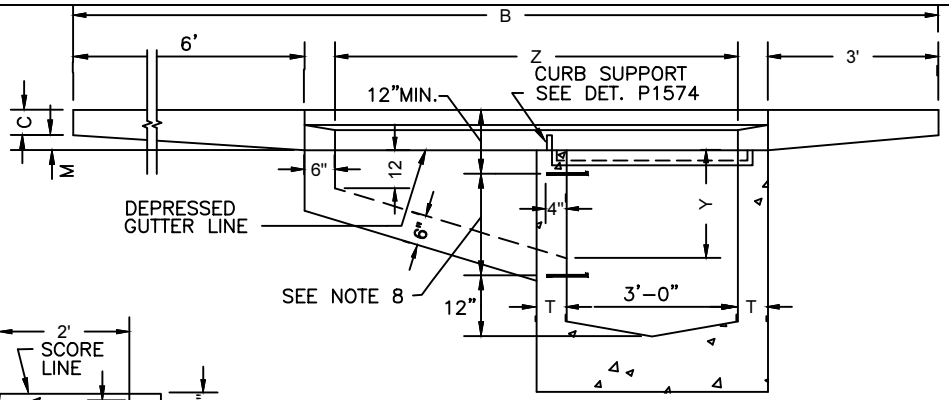

SECTION B–B

C=6" STD. CURB, M=2"
C=5" STD. CURB, M=3"
C=4" STD. CURB, M=4"

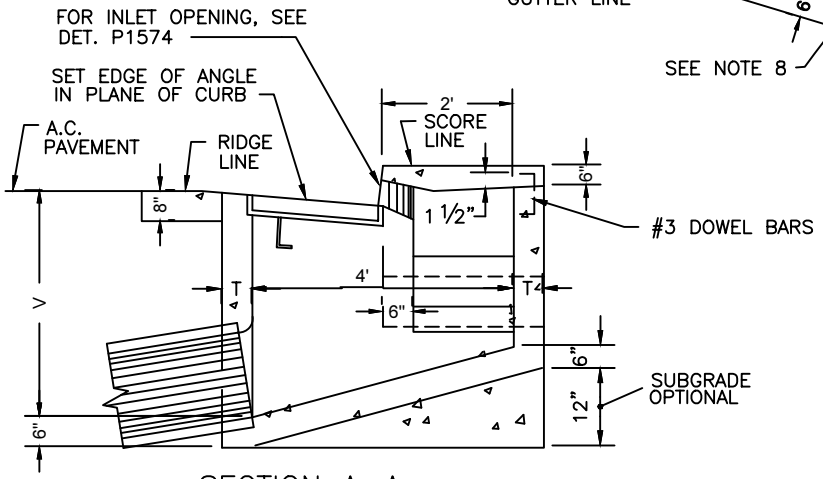

SECTION A–A

NOTES:

1. DIMENSIONS 'Z' SHALL EQUAL 7' OR 14' TYPES ARE DESIGNATED AS FOLLOWS: TYPE J7, (Z=7', Y=24", B=17') TYPE J14, (Z=14', Y=30", B=24')
2. ALL CONCRETE SHALL BE CLASS 'A'.
3. ALL REINFORCING STEEL SHALL BE DEFORMED BARS AND SHALL CONFORM TO A.S.T.M. SPEC. 615.
4. CONNECTOR PIPES MAY BE PLACED IN ANY WALL BENEATH THE GRATE AS PER PLANS.
5. FLOOR OF BASIN SHALL BE TROWELLED TO A HARD SMOOTH SURFACE AND SHALL SLOPE FROM ALL DIRECTIONS TO OUTLET.
6. CONSTRUCTION DRAINS SHALL BE INSTALLED WHEN NOTED. (SEE DET. P1575)
7. DO NOT SPECIFY THIS DETAIL FOR USE IN A MAJOR STREET.
8. THE FRAME SHALL BE DET. P1564, TYPE I AND THE GRATE SHALL BE DET. P1565, TYPE I.
9. INSTALL ONE CITY FURNISHED POLLUTION AWARENESS MARKER (PAM) AT EACH CATCH BASIN, AS DIRECTED BY THE ENGINEER.

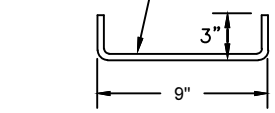

DOWEL BAR DETAIL

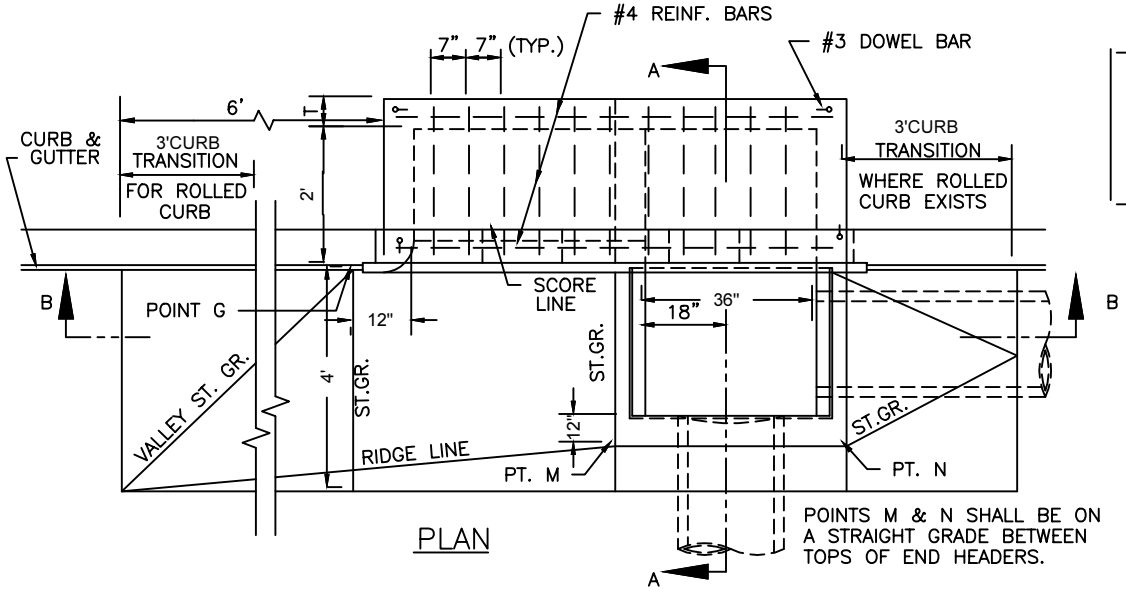

PLAN

CATCH BASIN WALL THICKNESS

T=6" IF V IS 4' OR LESS
T=8" IF V IS 4' TO 8'
IF V EXCEEDS 8' SPECIAL DESIGN IS REQUIRED
V=4'-0" UNLESS OTHERWISE NOTED

DETAIL NO.	City of Phoenix STANDARD DETAIL	CATCH BASIN COMBINATION TYPE "J" WITH CONCRETE APRON	APPROVED CITY ENGINEER 12/10/2012 DATE	DETAIL NO.
P1566				P1566

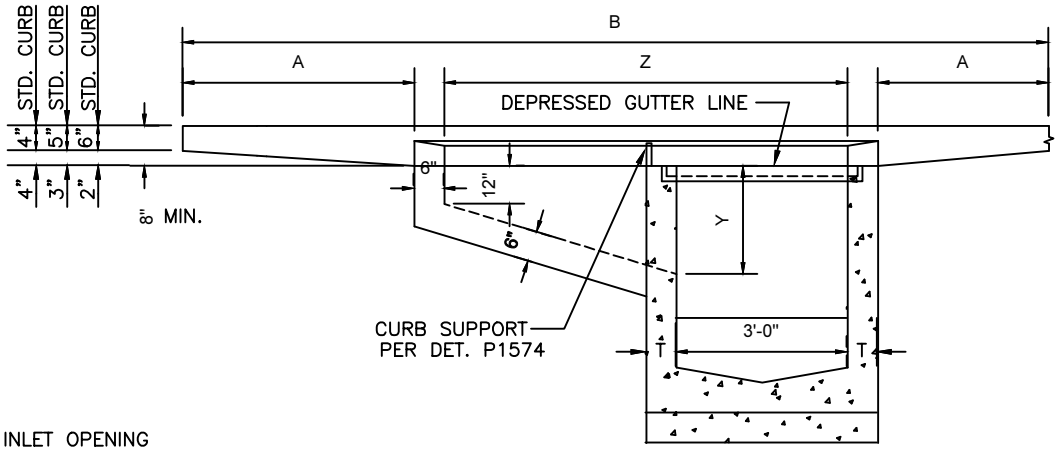

SECTION B–B

DEPRESSED GUTTER TRANSITION			
CURB HEIGHT	A	B	
		K7	K14
4"	3'–3"	14'–6"	21'–6"
5"	2'–6"	13'	20'
6"	1'–9"	11'–6"	18'–6"

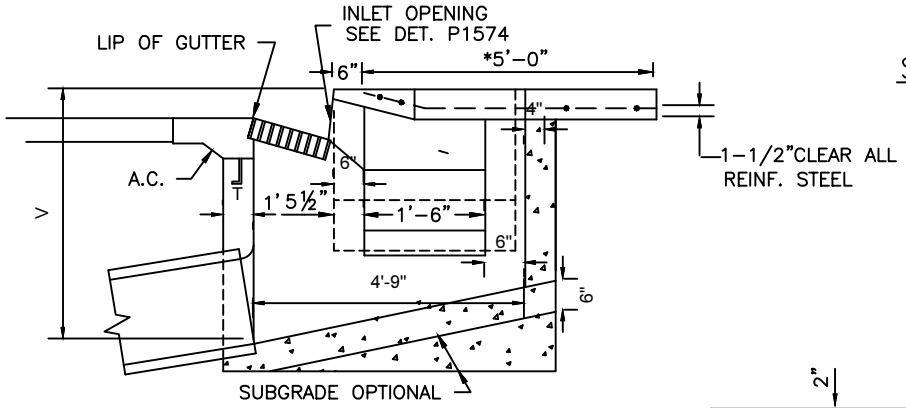

SECTION A–A

*4'–0" IN LOCATIONS
WHERE 4' S/W IS REQ'D

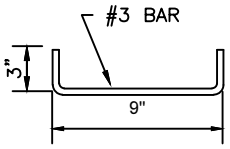

DOWEL BAR
DETAIL

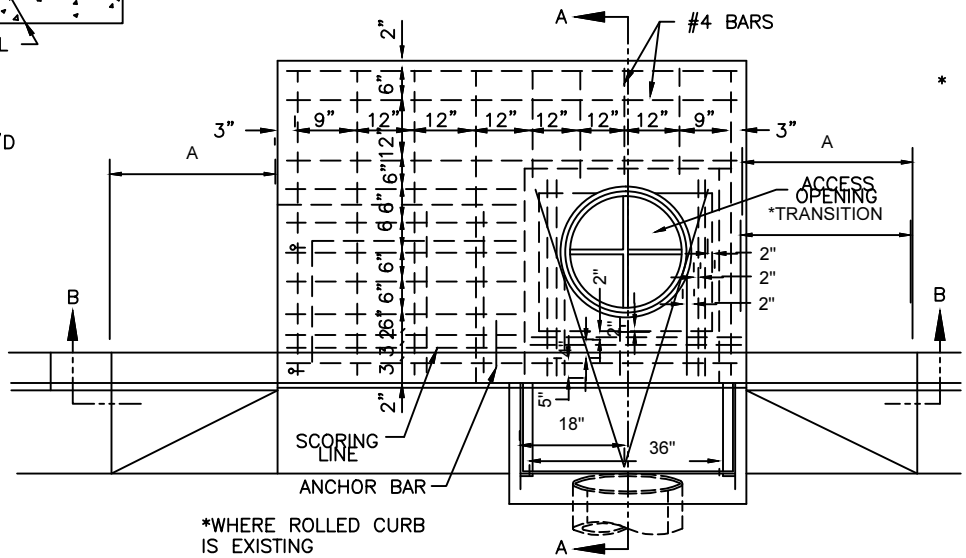

*WHERE ROLLED CURB
IS EXISTING

NOTES:

1. DIMENSION Z SHALL EQUAL 7' OR 14'
   TYPES ARE DESIGNATED AS FOLLOWS:
   △ TYPE K7 (Z=7', Y=24")
   △ TYPE K14 (Z=14', Y=30")
2. ALL CONCRETE SHALL BE CLASS 'A'.
3. ALL REINFORCING STEEL SHALL BE DEFORMED BARS AND SHALL CONFORM TO A.S.T.M. SPECIFICATION 615.
4. CONNECTOR PIPES MAY BE PLACED IN ANY WALL BENEATH THE GRATE AS PER PLANS.
5. FLOOR OF BASIN SHALL BE TROWELLED TO A HARD SMOOTH SURFACE AND SHALL SLOPE FROM ALL DIRECTIONS TO OUTLET.
6. CONSTRUCTION DRAINS SHALL BE INSTALLED WHEN NOTED. (SEE DET. P1575).
7. ACCESS FRAME AND COVER PER DET. P1561.
8. * THE FRAME SHALL BE DET. P1564, TYPE 2 AND THE GRATE SHALL BE DET. P1565, TYPE 2.
9. INSTALL ONE CITY FURNISHED POLLUTION AWARENESS MARKER (PAM) AT EACH CATCH BASIN, AS DIRECTED BY THE ENGINEER.

CATCH BASIN WALL THICKNESS

T=6" IF V IS 4' OR LESS
T=8" IF V IS 4' TO 10'
IF V EXCEEDS 8' SPECIAL DESIGN IS REQUIRED
V=4'–0" UNLESS OTHERWISE NOTED.

DETAIL NO.	City of Phoenix STANDARD DETAIL	CATCH BASIN COMBINATION TYPE "K"	APPROVED CITY ENGINEER 12/10/2012 DATE	DETAIL NO.
P1567				P1567

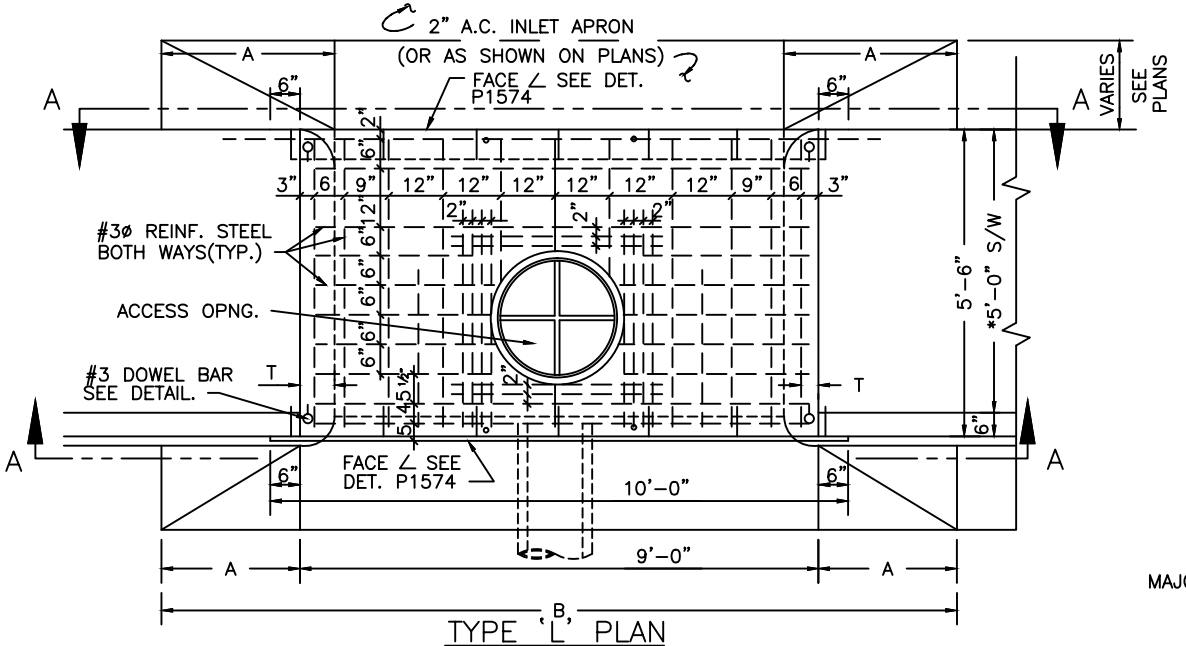

TYPE 'L' PLAN

NOTES:

1. ALL CONCRETE SHALL BE CLASS 'A'.
2. ALL REINFORCING STEEL SHALL BE DEFORMED BARS AND SHALL CONFORM TO A.S.T.M. SPECIFICATION 615.
3. CONNECTOR PIPES MAY BE PLACED IN ANY WALL AS PER PLANS.
4. FLOOR OF BASIN SHALL BE TROWELLED TO A HARD, SMOOTH SURFACE AND SHALL SLOPE FROM ALL DIRECTIONS TO OUTLET.
5. CONSTRUCTION DRAINS SHALL BE INSTALLED WHEN SPECIFIED. (SEE DET. P1575.)
6. ACCESS FRAME AND COVER PER DET. P1561.
7. INSTALL ONE CITY FURNISHED POLLUTION AWARENESS MARKER (PAM) AT EACH CATCH BASIN, AS DIRECTED BY THE ENGINEER.

* TO BE 4'-0" IN LOCATIONS WHERE 4' S/W IS REQUIRED.

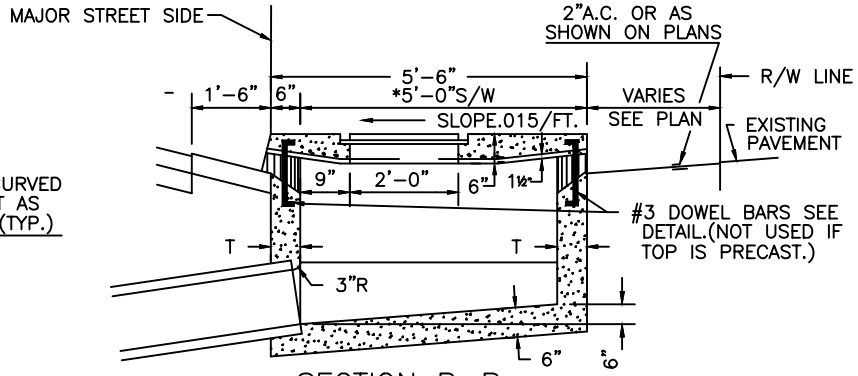

SECTION B–B

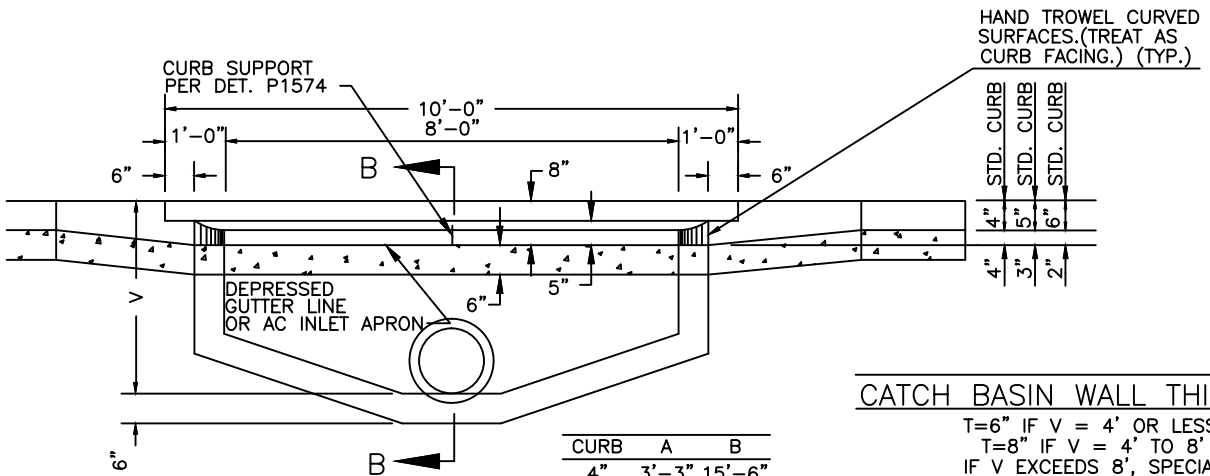

SECTION A–A

CURB	A	B
4"	3'-3"	15'-6"
5"	2'-6"	14'-0"
6"	1'-9"	12'-6"

CATCH BASIN WALL THICKNESS

T=6" IF V = 4' OR LESS
T=8" IF V = 4' TO 8'
IF V EXCEEDS 8', SPECIAL DESIGN IS REQUIRED.
V=4'-0" UNLESS OTHERWISE NOTED.

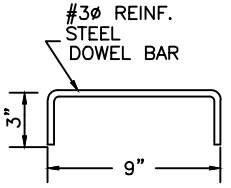

DOWEL BAR DETAIL

DETAIL NO.	City of Phoenix STANDARD DETAIL	CATCH BASIN – TYPE "L" CURB & PARKWAY OPENING INLET DETAILS	APPROVED CITY ENGINEER 12/10/2012 DATE	DETAIL NO.
P1568				P1568

GUTTER TRANSITION	
CURB HEIGHT	DIM 'A'
4"	3'–3"
5"	2'–6"
6"	1'–9"

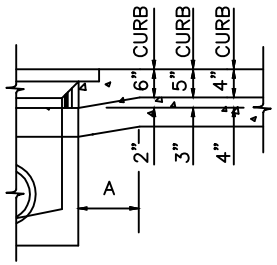

DEPRESSED GUTTER

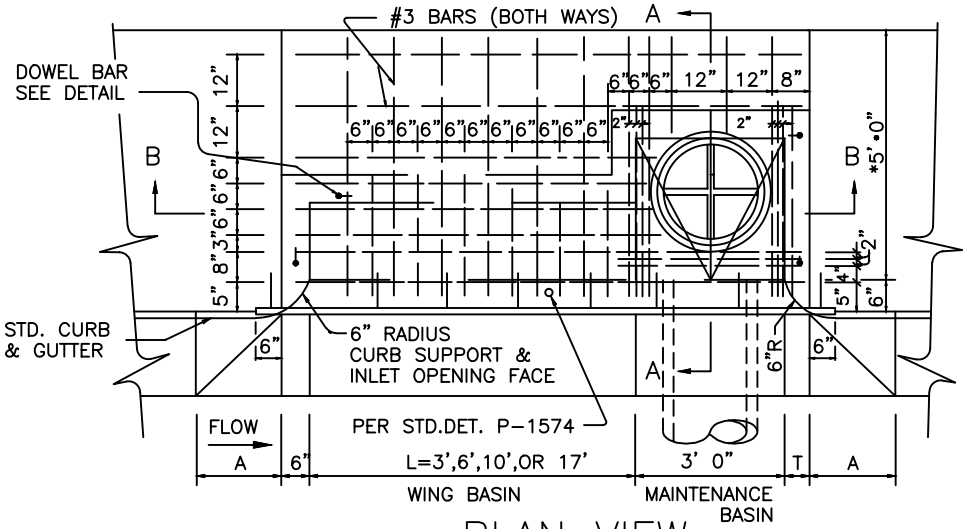

PLAN VIEW

NOTES

1. TYPES ARE DESIGNATED AS FOLLOWS: 'M'.. NO WING, 'M–1'.. ONE WING, 'M–2'.. TWO WINGS.
2. ALL CONCRETE SHALL BE CLASS 'A'.
3. ALL REINFORCING STEEL SHALL BE DEFORMED BARS AND SHALL CONFORM TO A.S.T.M. SPECIFICATION 615.
4. CONNECTOR PIPES SHALL BE PLACED IN THE APPROPRIATE WALL OF THE MAINTENANCE BASIN.
5. FLOOR OF BASIN SHALL BE TROWELLED TO A HARD, SMOOTH SURFACE AND SHALL SLOPE FROM ALL DIRECTIONS TO OUTLET.
6. CONSTRUCTION DRAINS SHALL BE INSTALLED IN WHEN NOTED. (SEE DET. P–1575.)
7. LOCATE WING BASIN ON UPSTREAM SIDE OF MAINTENANCE BASIN FOR TYPE M–1. WING BASINS FOR TYPE M–2 SHALL BE BOTH SIDES OF MAINTENANCE BASIN.
8. ACCESS FRAME AND COVER PER DET. P–1561
9. INSTALL ONE CITY FURNISHED POLLUTION AWARENESS MARKER (PAM) AT EACH CATCH BASIN, AS DIRECTED BY THE ENGINEER.

TRANSITION (BOTH SIDES)

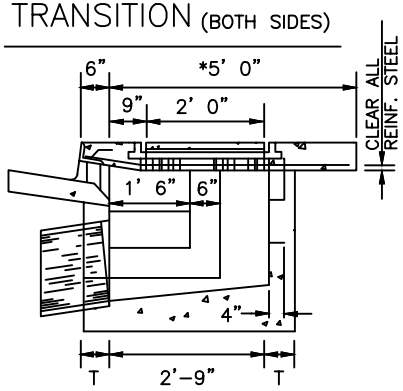

SECTION A – A

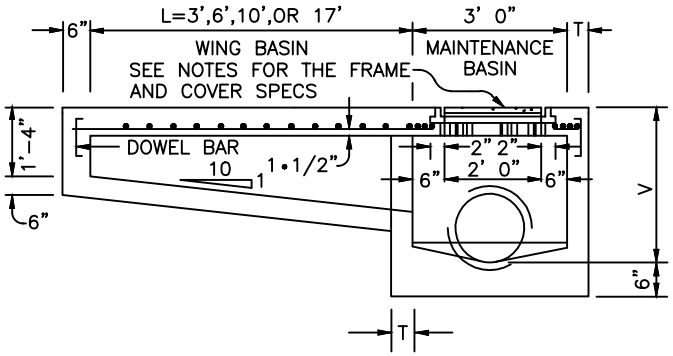

SECTION B – B

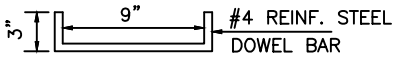

DOWEL BAR DETAIL

CATCH BASIN WALL THICKNESS
T = 6" IF V = 4' OR LESS T = 8" IF V = 4' TO 8' (IF V EXCEEDS 8', SPECIAL DESIGN IS REQUIRED.)
L = 0' UNLESS SPECIFIED ON THE PLANS V = 4'–0" MIN. UNLESS OTHERWISE NOTED

*4'–0" IN LOCATIONS WHERE 4' SIDEWALK IS REQ'D.

DETAIL NO.	City of Phoenix STANDARD DETAIL	CATCH BASIN TYPE "M"	APPROVED CITY ENGINEER 12/10/2012 DATE	DETAIL NO.
P1569–1				P1569–1

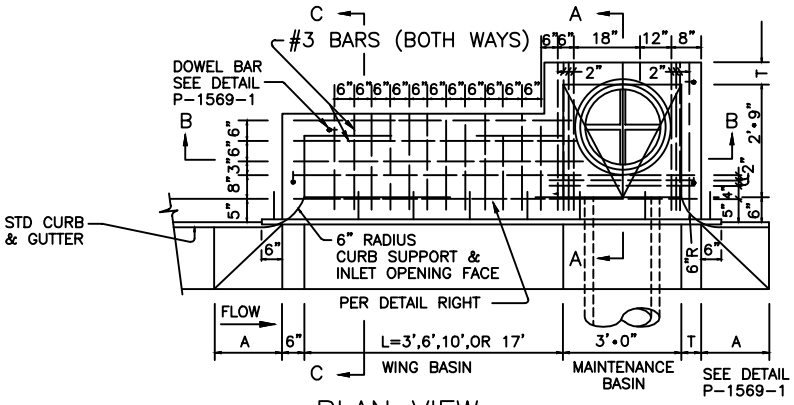

PLAN VIEW

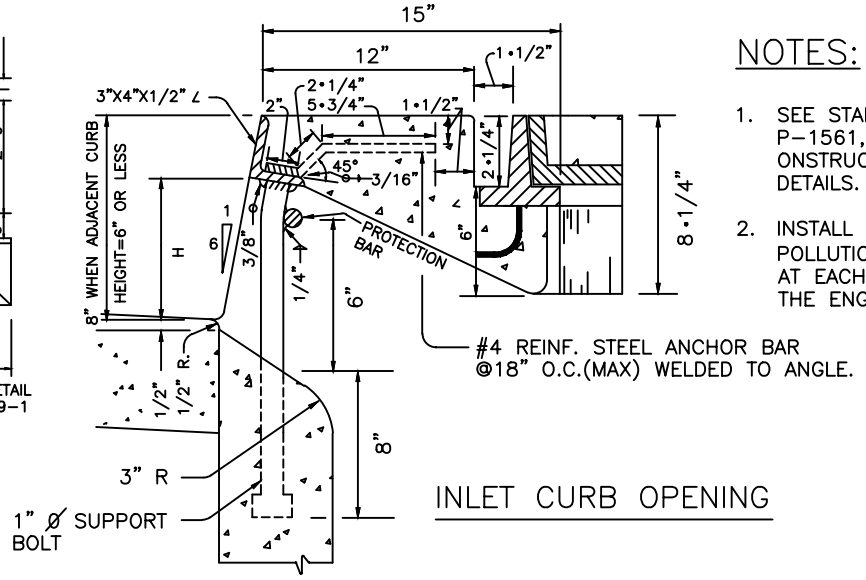

INLET CURB OPENING

NOTES:

1. SEE STANDARD DETAILS P-1569-1, P-1561, AND P-1574 FOR ONSTRUCTION NOTES AND ADDITIONAL DETAILS.
2. INSTALL ONE CITY FURNISHED POLLUTION AWARENESS MARKER (PAM) AT EACH CATCH BASIN, AS DIRECTED BY THE ENGINEER.

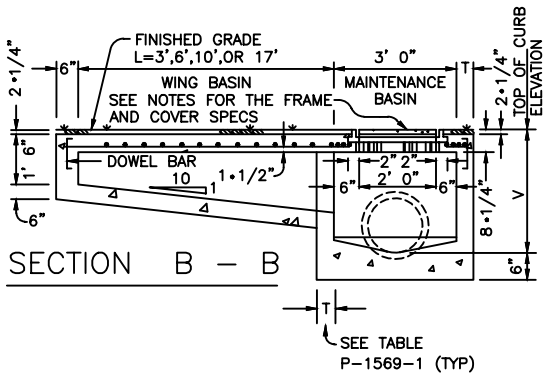

SECTION B – B

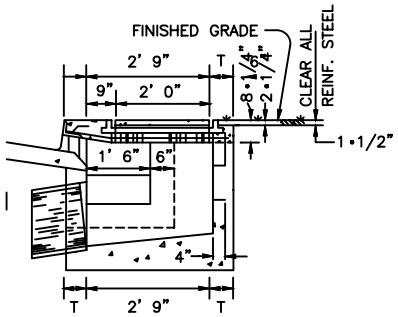

SECTION A – A

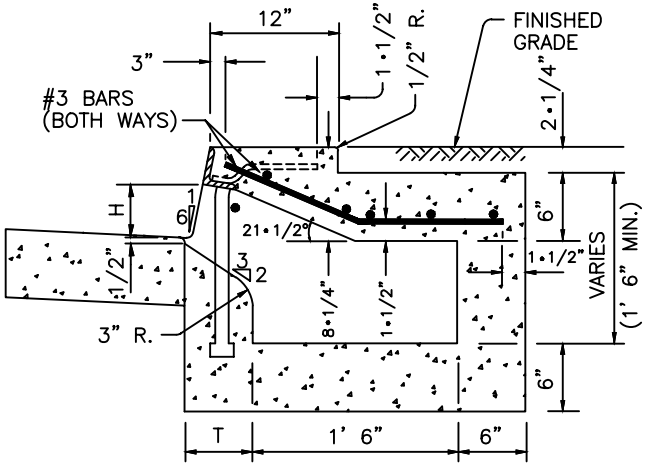

SECTION C – C

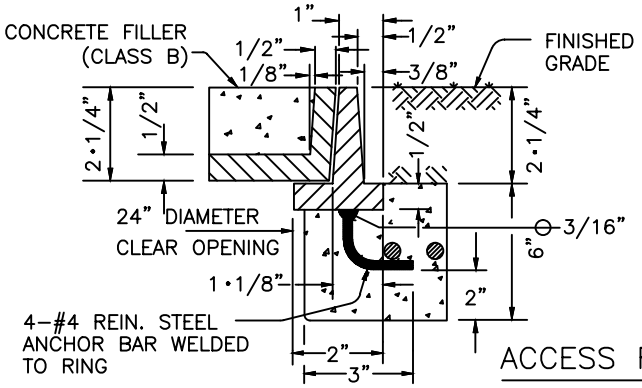

ACCESS FRAME & COVER

DETAIL NO.	City of Phoenix STANDARD DETAIL	CATCH BASIN – TYPE "M" TOP MODIFICATION IN LANDSCAPE PARKWAY	APPROVED CITY ENGINEER 12/10/2012 DATE	DETAIL NO.
P1569-2				P1569-2

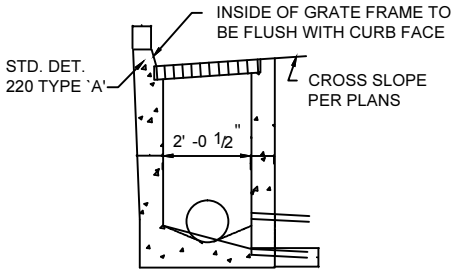

`N' CATCH BASIN IN
VERTICAL CURB & GUTTER

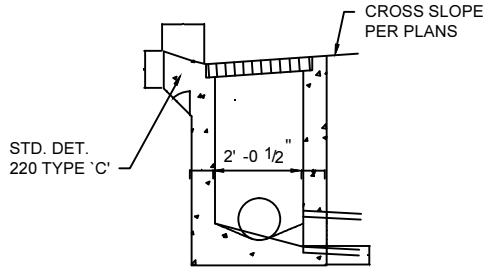

`N' CATCH BASIN IN
ROLL CURB & GUTTER

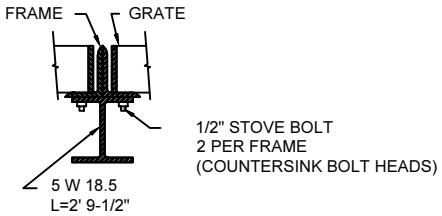

SECTION B-B

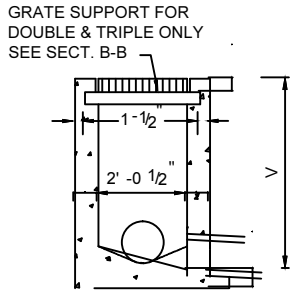

SECTION A-A

NOTES:

1. ALL CONCRETE SHALL BE CLASS `A'.
2. CONNECTOR PIPES MAY BE PLACED IN ANY WALL AS PER PLAN.
3. FLOOR OF BASIN SHALL BE TROWELLED TO A HARD, SMOOTH SURFACE AND SHALL SLOPE FROM ALL DIRECTIONS TO OUTLET.
4. CONSTRUCTION DRAINS SHALL BE INSTALLED WHEN NOTED. (SEE DETAIL P1575)
5. CONNECTOR PIPE SHALL BE TRIMMED TO THE FINAL SHAPE AND LENGTH BEFORE CONCRETE IS POURED.
6. PLANS SHOULD SPECIFY ELEVATION AND INVERT ELEVATION.
7. THE TYPE `N' CATCH BASIN MAY BE PREFABRICATED PROVIDING A SHOP DRAWING IS APPROVED BY THE ENGINEER PRIOR TO FABRICATION.
8. THE FRAME SHALL BE DET. P1564, TYPE 1 AND THE GRATE SHALL BE DET. P1565, TYPE 1.
9. EXPANSION JOINT (TYP)
10. INSTALL ONE CITY FURNISHED POLLUTION AWARENESS MARKER (PAM) AT EACH CATCH BASIN, AS DIRECTED BY THE ENGINEER.

CATCH BASIN WALL THICKNESS

T=6" IF V = 4' OR LESS
T=8" IF V = 4' TO 8'
(IF V EXCEEDS 8' SPECIAL DESIGN IS REQUIRED)
V=4'-0' UNLESS OTHERWISE NOTED.

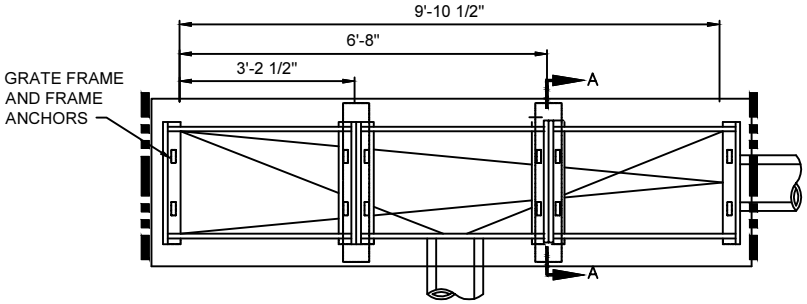

TRIPLE CATCH BASIN PLAN

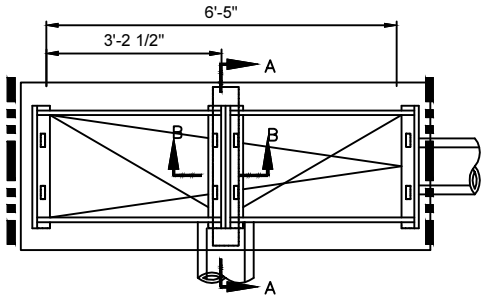

DOUBLE CATCH BASIN PLAN

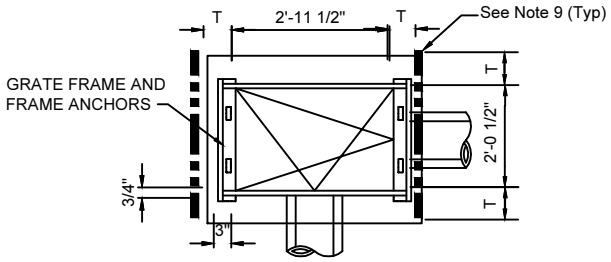

SINGLE CATCH BASIN PLAN

DETAIL NO.	City of Phoenix STANDARD DETAIL	CATCH BASIN TYPE "N"	APPROVED CITY ENGINEER 12/10/2012 DATE	DETAIL NO.
P1570				P1570

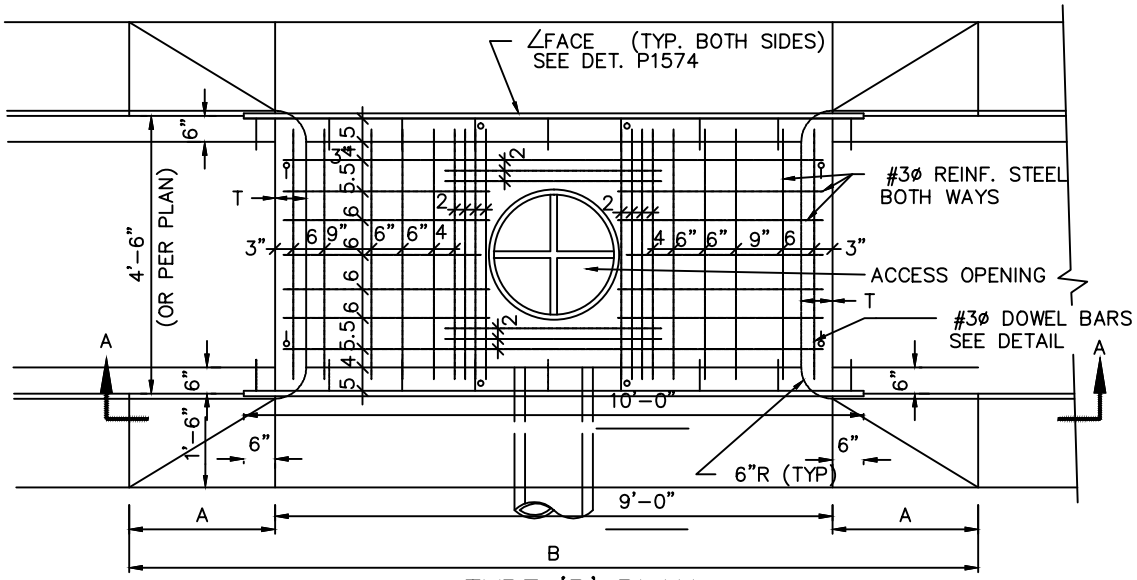

TYPE 'P' PLAN

NOTES:

1. ALL CONCRETE SHALL BE CLASS 'A'.
2. ALL REINFORCING STEEL SHALL BE DEFORMED BARS AND SHALL CONFORM TO A.S.T.M. SPECIFICATION 615.
3. CONNECTOR PIPES MAY BE PLACED IN ANY WALL AS PER PLANS.
4. FLOOR OF BASIN SHALL BE TROWELLED TO A HARD, SMOOTH SURFACE AND SHALL SLOPE FROM ALL DIRECTIONS TO OUTLET.
5. CONSTRUCTION DRAINS SHALL BE INSTALLED IN ALL INLETS BUILT WITH PAVING PROJECTS. (SEE DET. P1575.)
6. ACCESS FRAME AND COVER PER DET. P1561.
7. INSTALL ONE CITY FURNISHED POLLUTION AWARENESS MARKER (PAM) AT EACH CATCH BASIN, AS DIRECTED BY THE ENGINEER.

CATCH BASIN WALL THICKNESS

T=6" IF V = 4' OR LESS
T=8" IF V = 4' TO 8'
IF V EXCEEDS 8', SPECIAL DESIGN IS REQUIRED.
V=4'-0" UNLESS UNLESS OTHERWISE SPECIFIED.

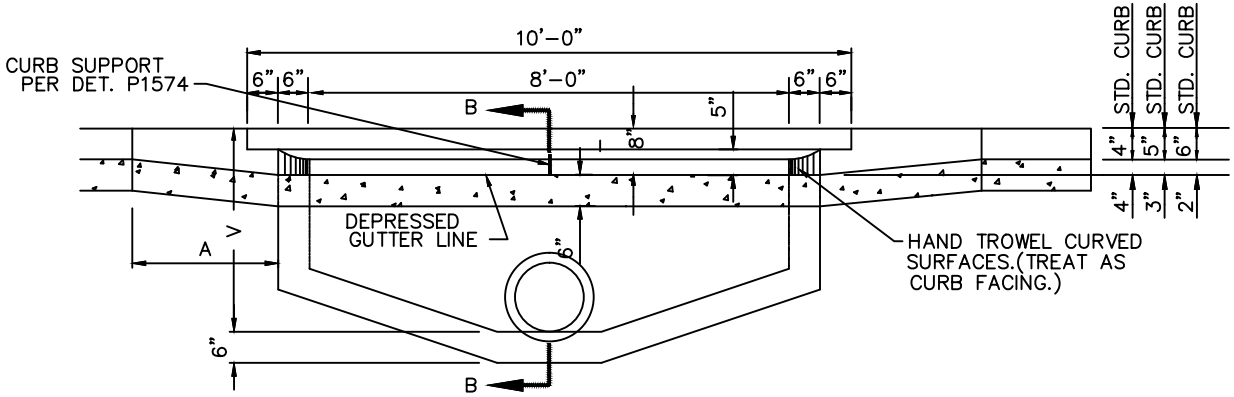

SECTION A-A

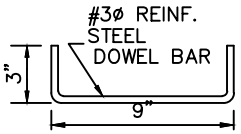

DOWEL BAR DETAIL

CURB	A	B
4"	3'-3"	15'-6"
5"	2'-6"	14'-0"
6"	1'-9"	12'-6"

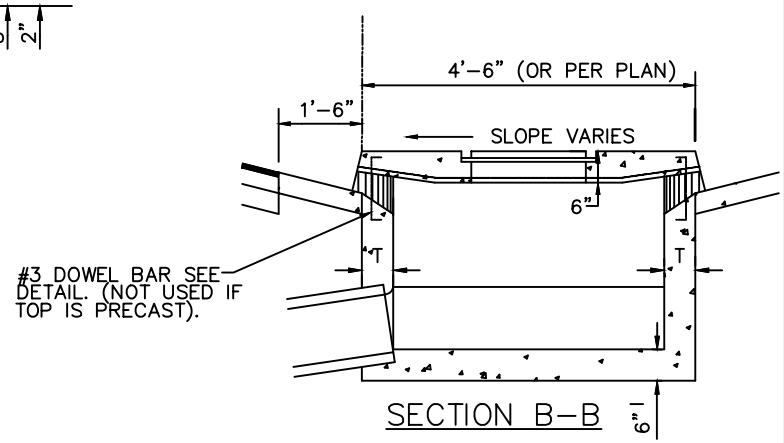

SECTION B-B

DETAIL NO.	City of Phoenix STANDARD DETAIL	CATCH BASIN – TYPE "P" DOUBLE CURB OPENING FOR FRONTAGE ROAD ISLANDS	APPROVED CITY ENGINEER 12/10/2012 DATE	DETAIL NO.
P1571				P1571

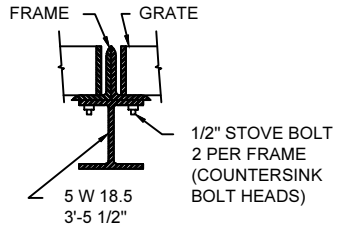

SECTION B-B

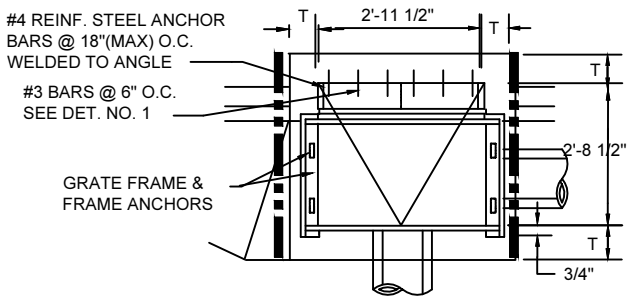

SINGLE CATCH BASIN PLAN

NOTES:

1. ALL CONCRETE SHALL BE CLASS `A'.
2. CONNECTOR PIPES MAY BE PLACED IN ANY WALL AS PER PLAN.
3. FLOOR OF BASIN SHALL BE TROWELLED TO A HARD, SMOOTH SURFACE AND SHALL SLOPE FROM ALL DIRECTIONS TO OUTLET.
4. CONSTRUCTION DRAINS SHALL BE INSTALLED WHEN NOTED. (SEE DETAIL P1575)
5. CONNECTOR PIPE SHALL BE TRIMMED TO THE FINAL SHAPE AND LENGTH BEFORE CONCRETE IS POURED.
6. THE FRAME SHALL BE DET. P1564, TYPE 1 AND THE GRATE SHALL BE DET. P1565, TYPE 1.
7. EXPANSION JOINT (TYP)
8. INSTALL ONE CITY FURNISHED POLLUTION AWARENESS MARKER (PAM) AT EACH CATCH BASIN, AS DIRECTED BY THE ENGINEER.

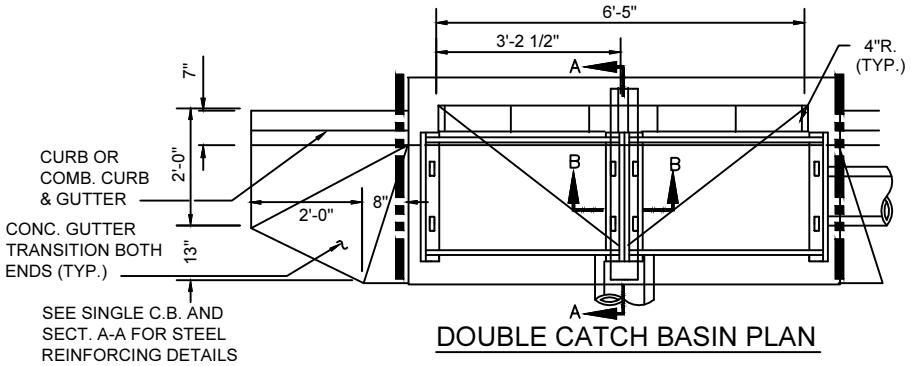

DOUBLE CATCH BASIN PLAN

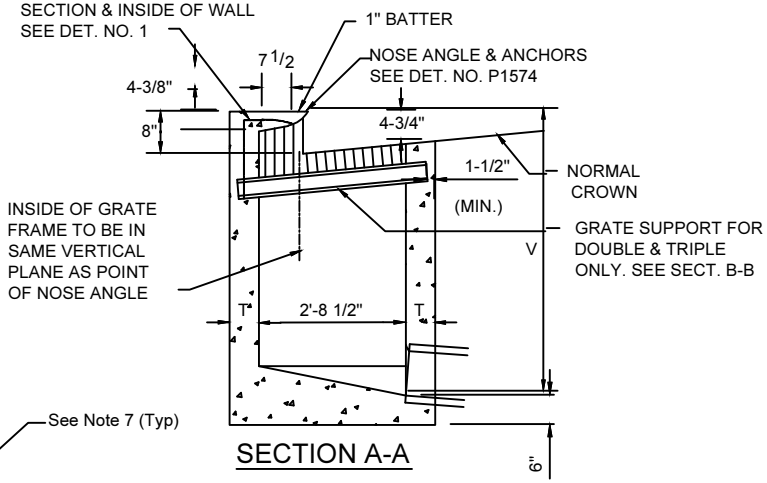

SECTION A-A

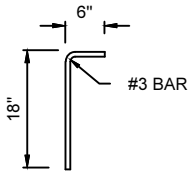

DETAIL 1

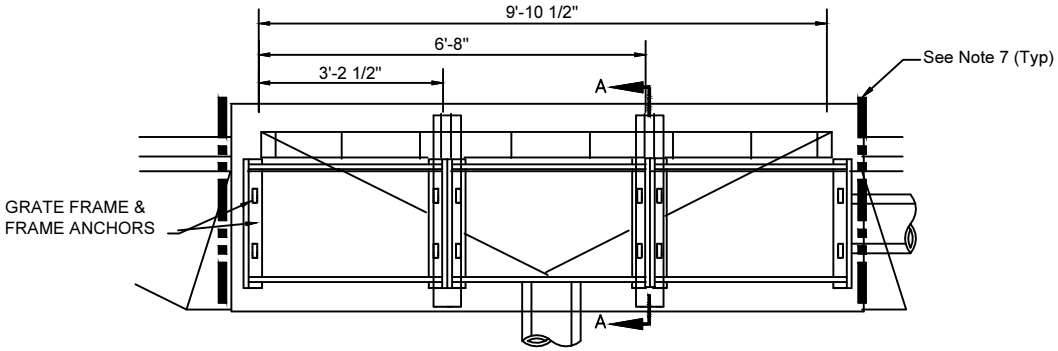

TRIPLE CATCH BASIN PLAN

CATCH BASIN WALL THICKNESS

T=6" IF V = 4' OR LESS
T=8" IF V = 4' TO 8'
IF V EXCEEDS 8' SPECIAL DESIGN IS REQUIRED
V=4'-0' UNLESS OTHERWISE NOTED.

DETAIL NO.	City of Phoenix STANDARD DETAIL	CATCH BASIN TYPE "Q"	APPROVED CITY ENGINEER 12/10/2012 DATE	DETAIL NO.
P1572				P1572

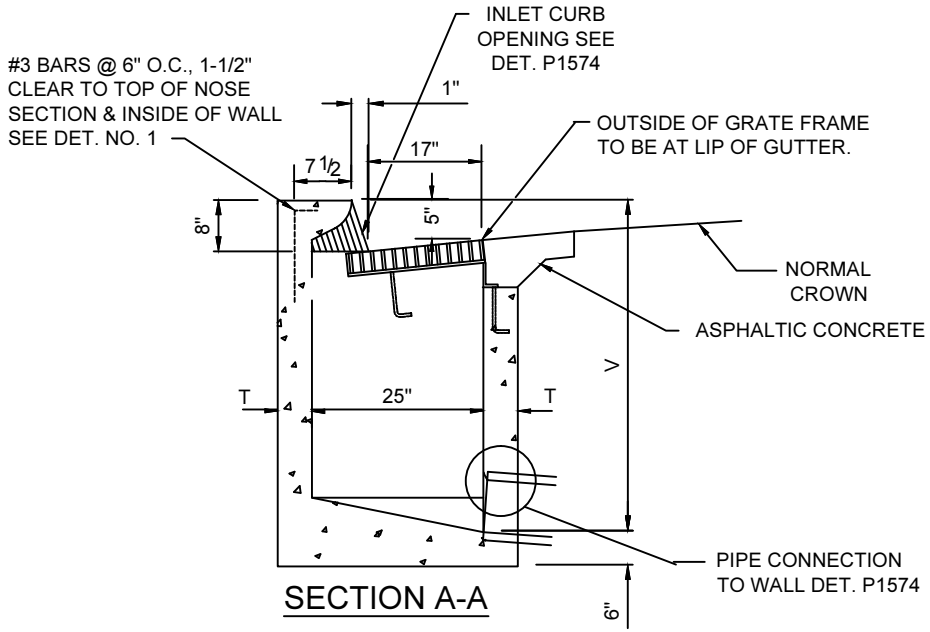

SECTION A-A

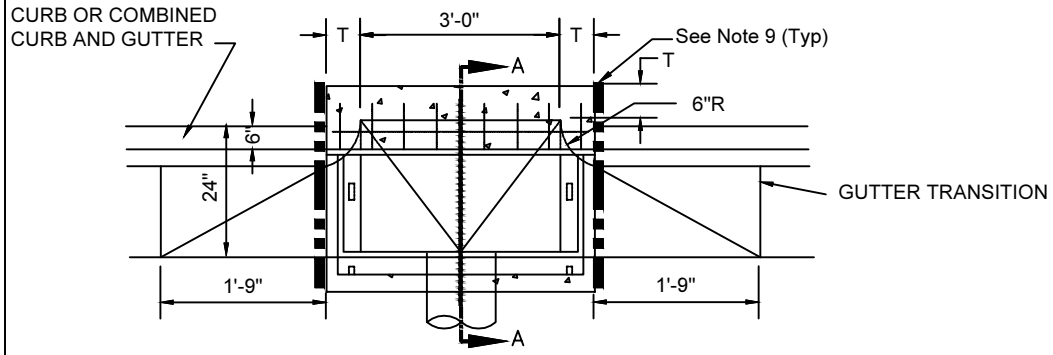

PLAN VIEW

NOTES:

1. ALL CONCRETE SHALL BE CLASS `A'.
2. CONNECTOR PIPES MAY BE PLACED IN ANY WALL AS PER PLAN.
3. FLOOR OF BASIN SHALL BE TROWELLED TO A HARD, SMOOTH SURFACE AND SHALL SLOP FROM ALL DIRECTIONS TO OUTLET.
4. THE CONSTRUCTION DRAINS SHALL BE INSTALLED IN ALL INLETS BUILT WITH PAVING PROJECTS (SEE DET. P1575).
5. CONNECTOR PIPE SHALL BE TRIMMED TO THE FINAL SHAPE AND LENGTH BEFORE CONCRETE IS POURED.
6. LOCATION OF THE TYPE `R' CATCH BASIN SHALL BE RESTRICTED TO AREAS WHERE 6" VERTICAL CURB & GUTTER IS EXISTING.
7. ALL REINFORCING STEEL SHALL BE DEFORMED BARS AND SHALL CONFORM TO A.S.T.M. SPECIFICATION 615.
8. THE FRAME SHALL BE DET. P1564, TYPE 2 AND THE GRATE SHALL BE DET. P1565, TYPE 2.
9. EXPANSION JOINT (TYP)
10. INSTALL ONE CITY FURNISHED POLLUTION AWARENESS MARKER (PAM) AT EACH CATCH BASIN, AS DIRECTED BY THE ENGINEER.

CATCH BASIN WALL THICKNESS

T=6" IF V = 4' OR LESS
T=8" IF V = 4' TO 8'
IF V EXCEEDS 8' SPECIAL DESIGN IS REQUIRED
V=4'-0' UNLESS OTHERWISE NOTED.

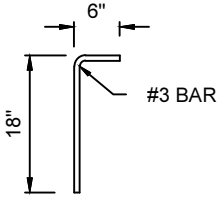

DETAIL 1

DETAIL NO.	City of Phoenix STANDARD DETAIL	CATCH BASIN TYPE "R"	APPROVED CITY ENGINEER 12/10/2012 DATE	DETAIL NO.
P1573				P1573

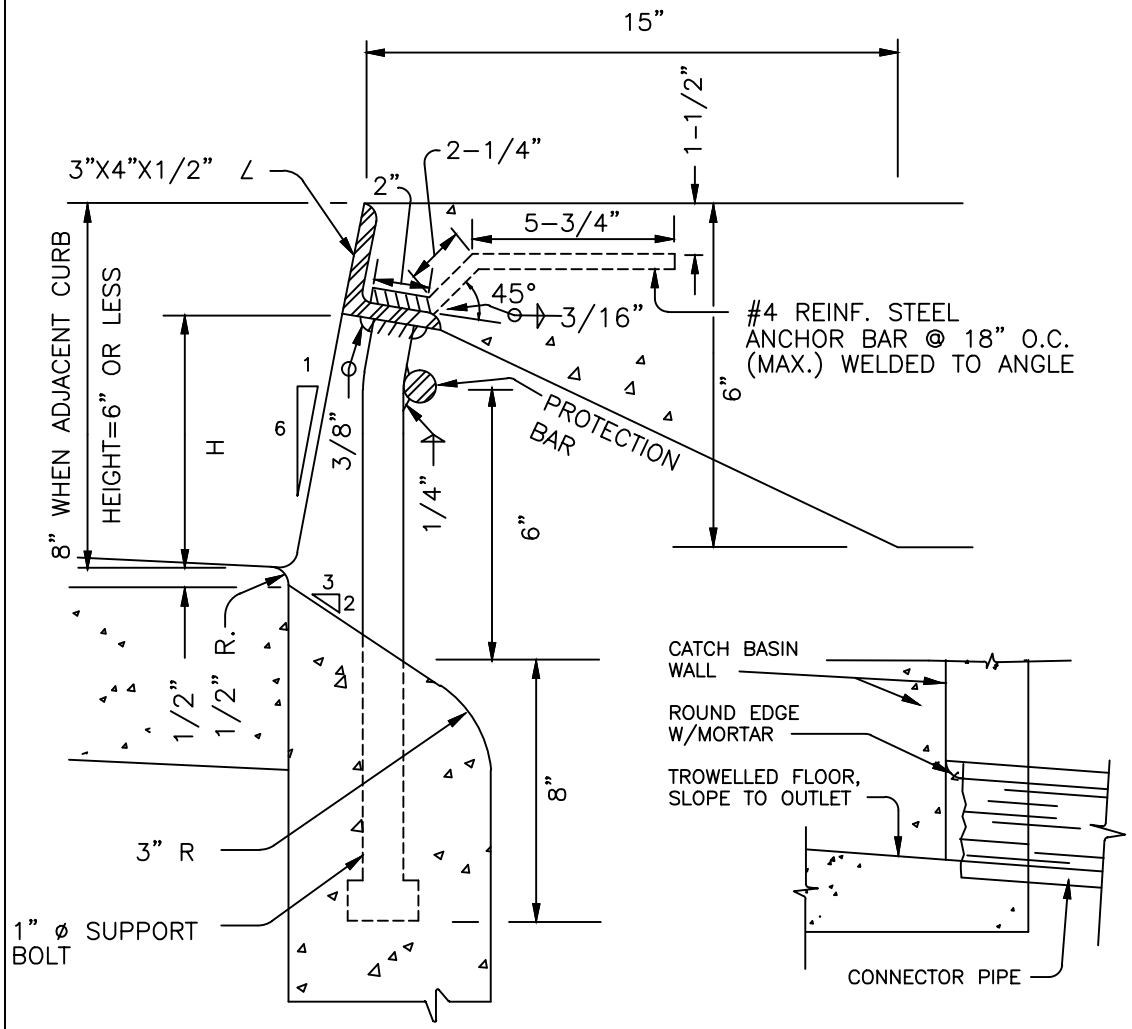

INLET CURB OPENING

PIPE ENTRY DETAIL

NOTES

1. CURB OPENING HEIGHT 'H' SHALL BE 5" (MINIMUM) UNLESS OTHERWISE SPECIFIED.
2. WHEN CURB OPENING HEIGHT 'H' EXCEEDS 6", INSTALL 1"Ø STEEL PROTECTION BARS. THE PROTECTION BARS SHALL EXTEND THE FULL LENGTH OF THE CURB OPENINGS AND SHALL BE EMBEDDED 3"(MIN.) AT EACH END.
3. INSTALL ADDITIONAL BARS AT 3 1/2" CLEAR SPACING ABOVE FIRST BAR WHEN OPENING EXCEEDS 13".
4. WHEN CURB OPENING LENGTH EXCEEDS 6', INSTALL 1"ø STEEL SUPPORT BOLTS, SPACED AT NO MORE THAN 5' O.C.
5. ALL EXPOSED METAL HARDWARE SHALL BE GIVEN ONE SHOP COAT OF NO.1 PAINT AND 2 FIELD COATS OF NO.10 PAINT AS PER SECTION 790.
6. ALL METAL UNITS SHALL BE FABRICATED FROM STRUCTURAL STEEL EXCEPT AS NOTED. STRUCTURAL STEEL SHALL BE IN ACCORDANCE WITH A.S.T.M. A-36.
7. WELDING SHALL BE IN ACCORDANCE WITH M.A.G. WELDING SPECIFICATIONS.
8. CONNECTOR PIPE SHALL BE TRIMMED TO THE FINAL SHAPE AND LENGTH BEFORE CONCRETE IS POURED.
9. WHEN CATCH BASIN IS LOCATED WITHIN A LANDSCAPE PARKWAY SECTION, SEE DETAIL P1569-2 FOR INLET MODIFICATIONS.

DETAIL NO.	City of Phoenix STANDARD DETAIL	INLET CURB OPENING & PIPE ENTRY DETAIL	APPROVED	DETAIL NO.
P1574			CITY ENGINEER — DATE 7/9/92	P1574

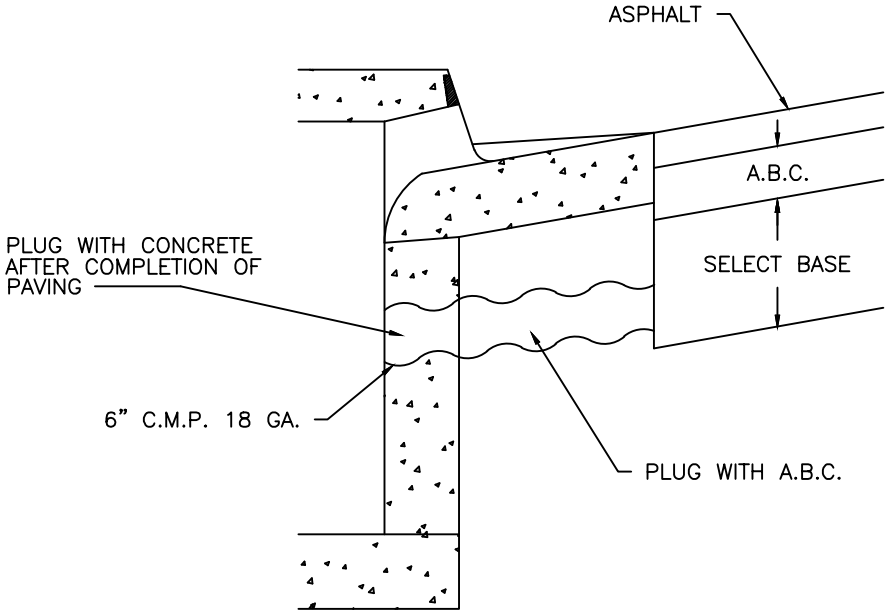

CURB OPENING INLET

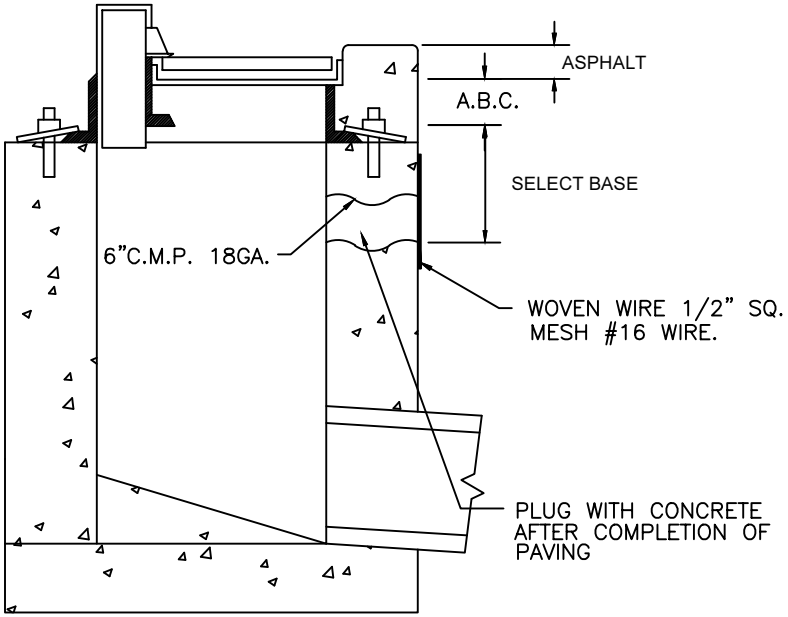

GRATE OPENING INLET

NOTES:

1. CONSTRUCTION DRAINS TO BE INSTALLED IN ALL INLETS BUILT WITH PAVING PROJECTS.
2. SEE PROJECT PLANS FOR INLET DETAILS AND DEPTH OF PAVING.

DETAIL NO.	City of Phoenix STANDARD DETAIL	CONSTRUCTION SUB-GRADE DRAIN	APPROVED	DETAIL NO.
P1575			FOR CITY ENGINEER — 7/9/92 DATE	P1575

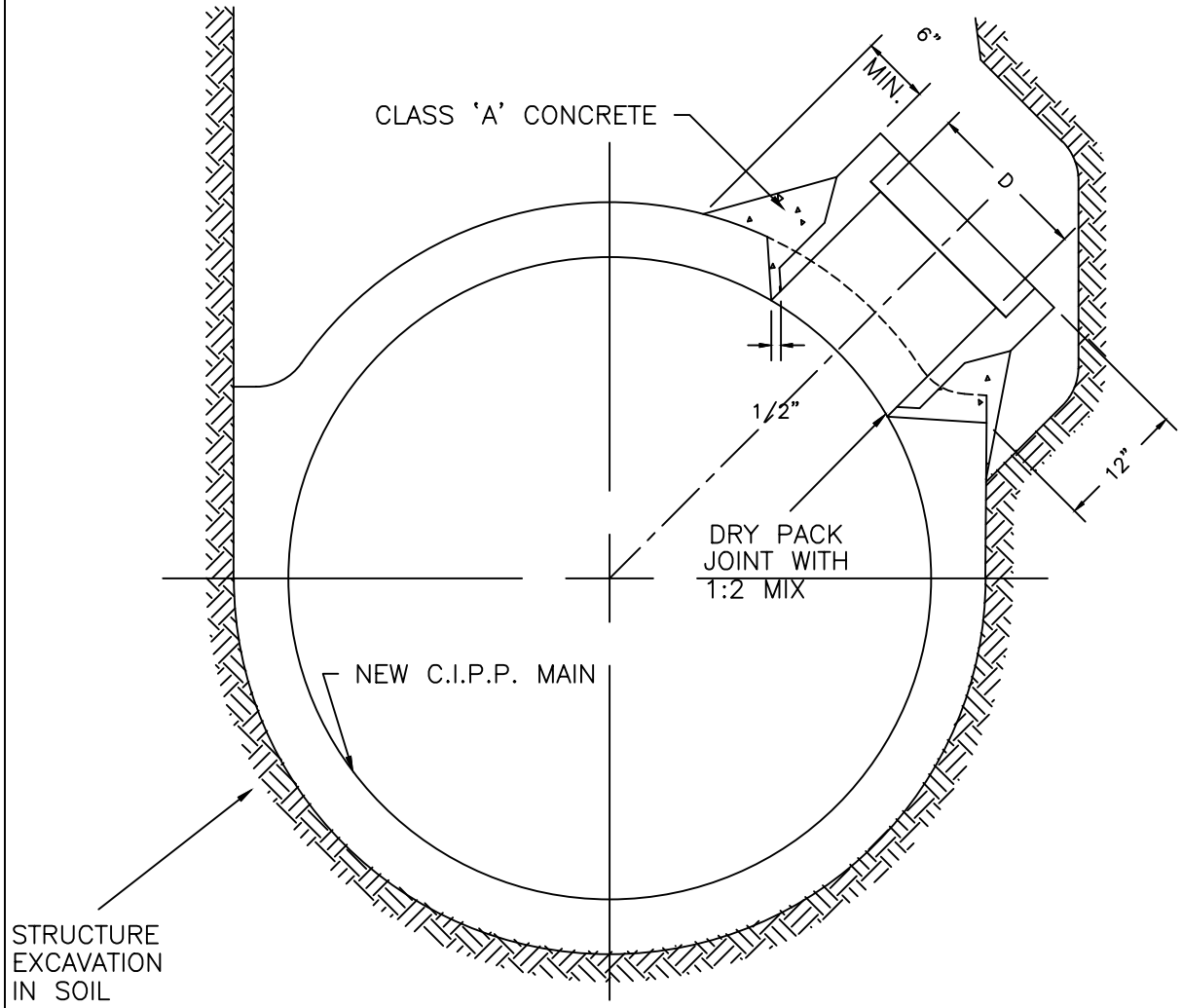

NOTES:

1. "D" SHALL BE 24" OR LESS.
2. PRECAST TEE SHALL BE INSTALLED WHERE THE MAINLINE PIPE IS SMALLER THAN THE MINIMUM OR THE CONNECTING PIPE IS LARGER THAN 24".
3. THE BELL END OF THE PRECAST CONCRETE PIPE SHALL BE INSTALLED AS SHOWN WHILE CONCRETE OF MAINLINE PIPE IS WET.
4. TRENCH WALL TO BE EXCAVATED AS NECESSARY PRIOR TO POURING MAINLINE PIPE TO ACCOMMODATE LATERAL STUB.
5. AXIS OF LATERAL STUB SHALL BE AS PER PLAN AND CROSS-SECTION.
6. THE LATERAL STUB SHALL SATISFY STRENGTH REQUIREMENTS AS SPECIFIED FOR THE LATERAL PIPE.
7. LATERALS FOR FUTURE CONNECTION SHALL BE MARKED. (SEE MAG DETAIL 427)

CONNECTING PIPE SIZE	MINIMUM SIZE MAIN
15"	24"
18"	36"
21"	42"
24"	48"

DETAIL NO.	City of Phoenix STANDARD DETAIL	CAST-IN-PLACE PIPE LATERAL PIPE CONNECTION	APPROVED FOR CITY ENGINEER 8/6/99 DATE	DETAIL NO.
P1576				P1576

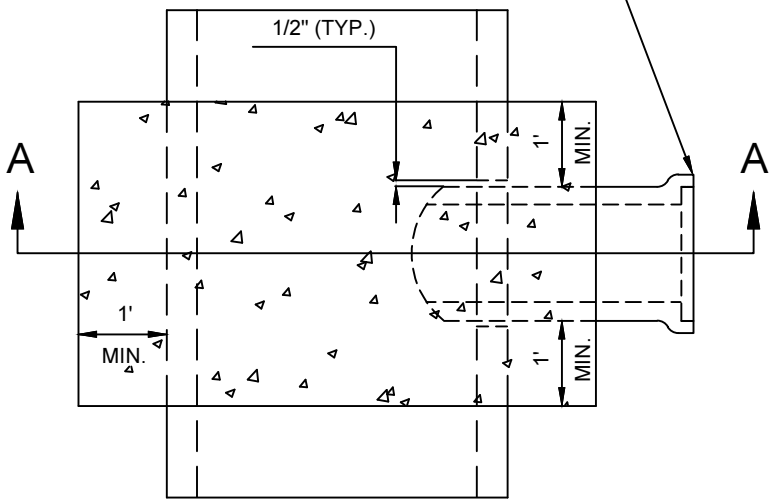

PLAN VIEW

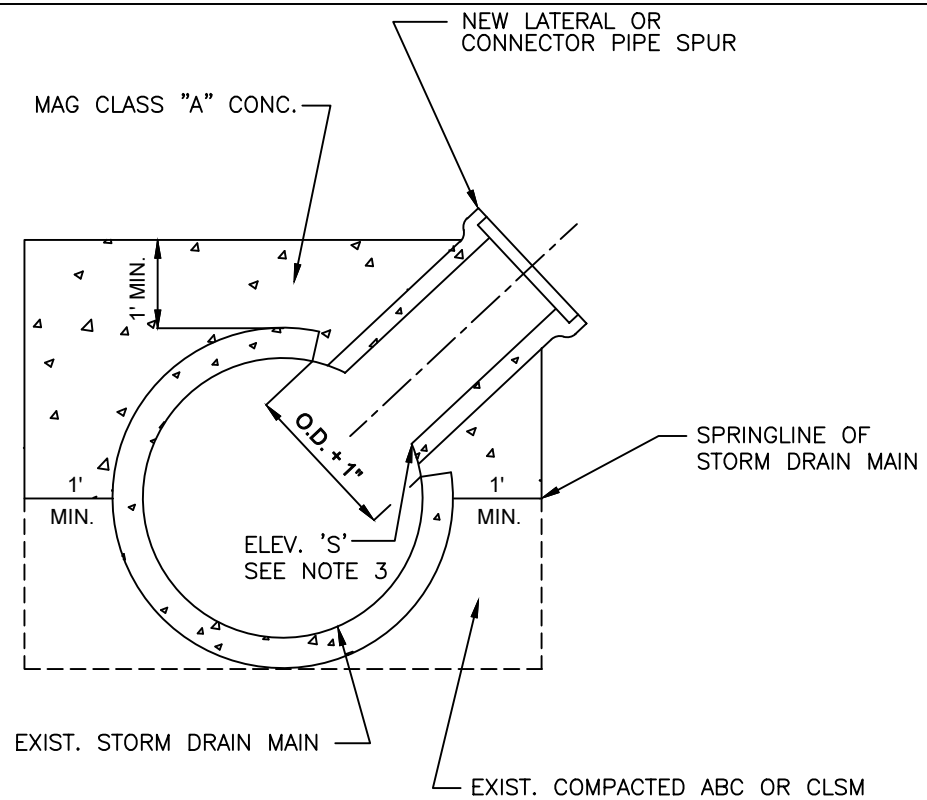

SECTION A–A

NOTES:

1. THIS DETAIL SHALL BE USED FOR CONNECTING NEW SMALL STORM DRAIN LATERALS OR CATCH BASIN CONNECTOR PIPES TO EXISTING STORM DRAIN MAINS.
2. THIS DETAIL SHALL ONLY BE USED WHEN OUTSIDE DIAMETER OF NEW LATERAL OR CONNECTOR PIPE SPUR IS LESS THAN OR EQUAL TO 1/2 THE INSIDE DIAMETER OF THE EXISTING STORM DRAIN MAIN.
3. THE CONNECTOR PIPE SPUR LINE SHALL BE CONSTRUCTED RADIAL TO THE MAIN, UNLESS OTHERWISE SHOWN BY ELEVATION 'S' AS SHOWN ON PLANS.
4. THE LENGTH OF THE SPUR STUB SHALL BE A MINIMUM OF 18" TO ALLOW FULL, CLEAN PIPE CONNECTION TO THE SPUR JOINT.
5. CONCRETE SHALL BE MAG CLASS "A".

DETAIL NO.	City of Phoenix STANDARD DETAIL	SMALL STORM DRAIN LATERAL OR CATCH BASIN CONNECTOR PIPE CONNECTION TO EXISTING STORM DRAIN MAIN	APPROVED CITY ENGINEER 07/01/2015 DATE	DETAIL NO.
P1577				P1577

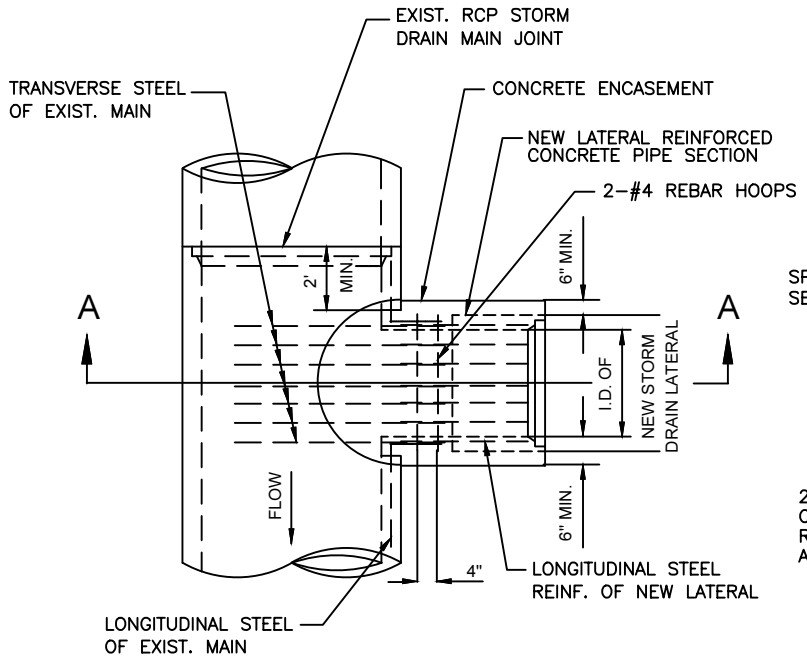

PLAN VIEW

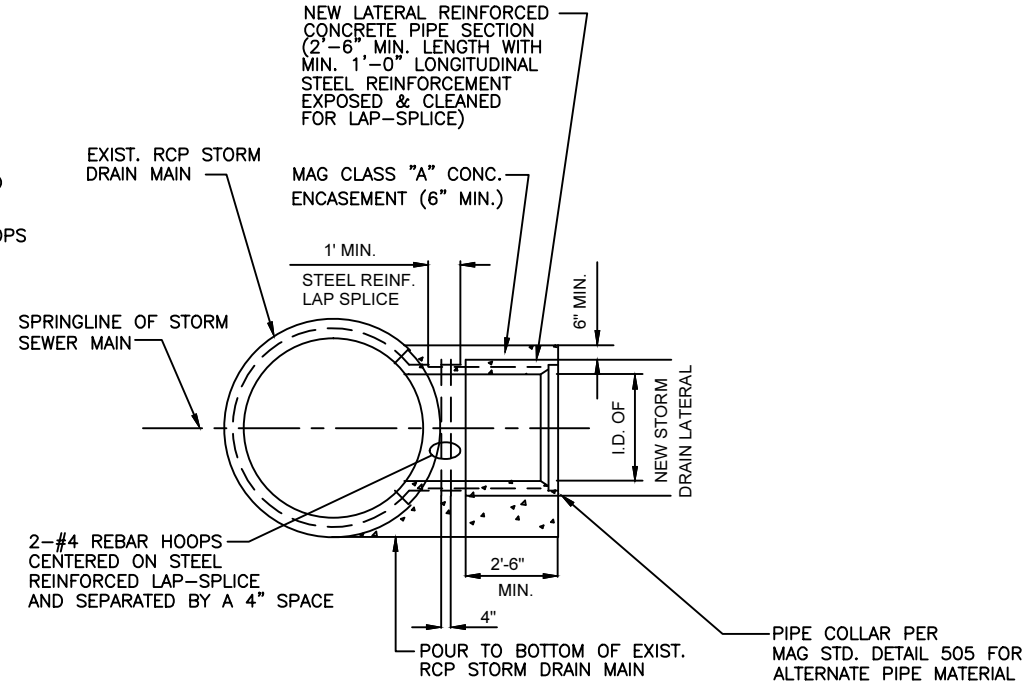

SECTION A-A

NOTES:

1. THIS DETAIL SHALL BE USED FOR CONNECTING NEW LARGE STORM DRAIN LATERALS OR CATCH BASIN CONNECTOR PIPES TO EXISTING RCP STORM DRAIN MAINS.
2. THIS DETAIL SHALL ONLY BE USED WHEN OUTSIDE DIAMETER OF NEW STORM DRAIN LATERAL OR CONNECTOR PIPE IS GREATER THAN 1/2, BUT LESS THAN THE FULL INSIDE DIAMETER OF THE EXISTING STORM DRAIN MAIN, AND NO OTHER TYPE CONNECTION (SUCH AS A MANHOLE OR SPECIAL JUNCTION STRUCTURE) IS FEASIBLE OR DESIRABLE.
3. THE EXISTING STORM DRAIN MAIN SHALL BE EXPOSED AT THE PROPOSED LOCATION OF NEW CONNECTION. IF NECESSARY, THE LOCATION MAY BE MOVED DOWN STREAM SUCH THAT THE OUTSIDE OF THE NEW OPENING WILL BE A MINIMUM OF 2' FROM THE NEAREST JOINT IN THE EXISTING PIPE MAIN.
4. A CIRCULAR OPENING IN THE EXISTING MAINLINE RCP PIPE SHALL BE CUT TO MATCH THE INSIDE DIAMETER OF THE NEW LATERAL, NORMAL TO THE PIPE SURFACE, WITHOUT DAMAGING STEEL. THE EXPOSED STEEL IN THE CIRCULAR OPENING OF THE EXISTING MAIN SHALL BE CUT TO PROVIDE RELATIVELY EQUAL-LENGTH REINFORCING STUBS AND BENT TO A HORIZONTAL POSITION IN PREPARATION FOR CONNECTION.
5. THE LONGITUDINAL STEEL ON THE END OF THE NEW STORM DRAIN LATERAL STUB SHALL BE PREPARED TO EXPOSE A MINIMUM 1'-0" OF CLEAN STEEL REINFORCEMENT FOR LAP-SPLICING AROUND THE PERIPHERY OF THE NEW STUB. THE EXPOSED STEEL OF THE EXISTING MAIN AND THE NEW STUB SHALL BE LAP-SPLICED A MINIMUM OF 1'-0" AND REINFORCE-TIED WITH 2-#4 REBAR HOOPS.
6. THE NEW STUB AND JOINT SHALL THEN BE ENCASED WITH A MINIMUM OF 6" OF MAG CLASS 'A' CONCRETE. THE ENCASEMENT SHALL EXTEND THE ENTIRE LENGTH OF THE STUB (MIN. 2'-6"). THE SPLICE-JOINT AREA BETWEEN THE PIPES SHALL BE NEATLY FORMED INSIDE TO CREATE A CLEAN, FORMED JOINT.

DETAIL NO.	City of Phoenix STANDARD DETAIL	LARGE STORM DRAIN LATERAL OR CATCH BASIN CONNECTOR PIPE TO EXISTING RCP STORM DRAIN MAIN	APPROVED CITY ENGINEER 07/01/2015 DATE	DETAIL NO.
P1578				P1578

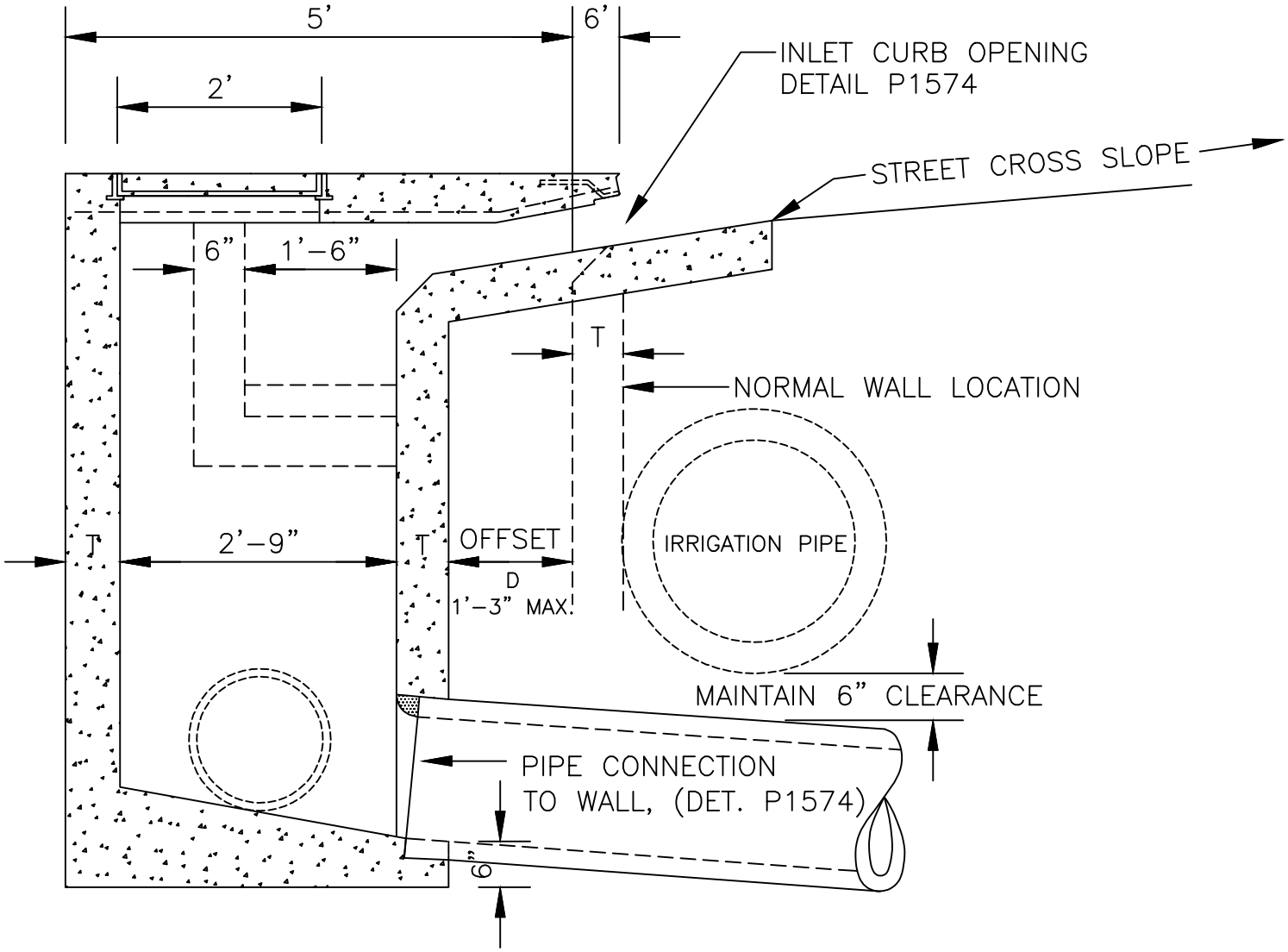

SECTION A-A

FOR ADDITIONAL INFORMATION & NOTES
SEE CITY OF PHOENIX DETAIL P1569-1.

DETAIL NO.	City of Phoenix STANDARD DETAIL	CATCH BASIN - TYPE "M" MODIFIED (OFFSET OPENING)	APPROVED Mario Saldamando CITY ENGINEER 7/3/00 DATE	DETAIL NO.
P1581				P1581

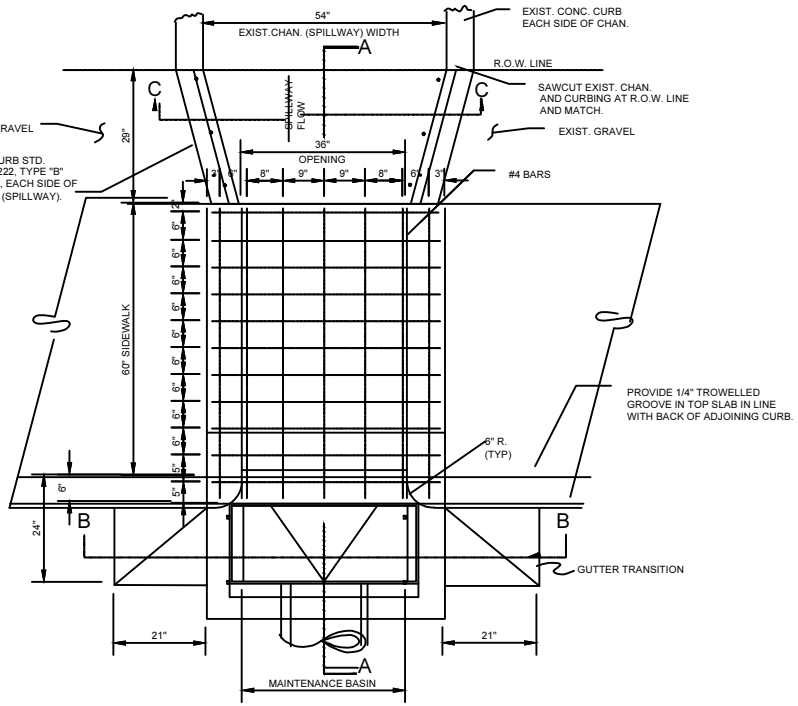

PLAN VIEW
NO SCALE

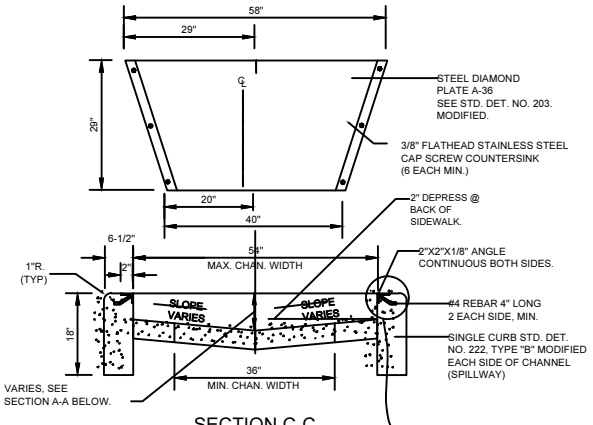

SECTION C-C
NO SCALE

GENERAL NOTES:

1. ALL CONCRETE SHALL BE CLASS "A".
2. ALL REINFORCING STEEL SHALL BE DEFORMED BARS AND SHALL CONFORM TO A.S.T.M. SPECIFICATION NO. 615.
3. CONNECTOR PIPES MAY BE PLACED IN ANY WALL AS PER PLAN.
4. FLOOR OF BASIN SHALL BE TROWELLED TO A HARD SMOOTH SURFACE AND SHALL SLOPE FROM ALL DIRECTIONS TO OUTLET.
5. CONNECTOR PIPE SHALL BE TRIMMED TO THE FINAL SHAPE AND LENGTH BEFORE CONCRETE IS POURED.
6. THE FRAME SHALL BE DETAIL P1564, TYPE 2 AND THE GRATE SHALL BE DETAIL P1565, TYPE 2.
7. TYPE IS DESIGNATED AS FOLLOWS: COMBINATION TYPE "L-R" MODIFIED.
8. INSTALL ONE CITY FURNISHED POLLUTION AWARENESS MARKER (PAM) AT EACH CATCH BASIN, AS DIRECTED BY THE ENGINEER.

CATCH BASIN WALL THICKNESS & DEPTH
T=6" IF V 4' ≤
T=8" IF V 4' > 8'
V=4' UNLESS OTHERWISE SPECIFIED.

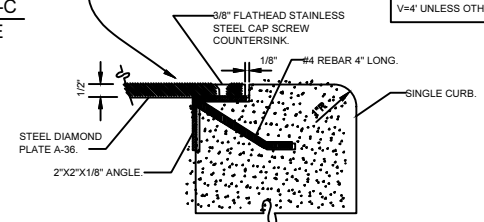

ENLARGED VIEW @ SECTION C-C
SHOWN ABOVE.

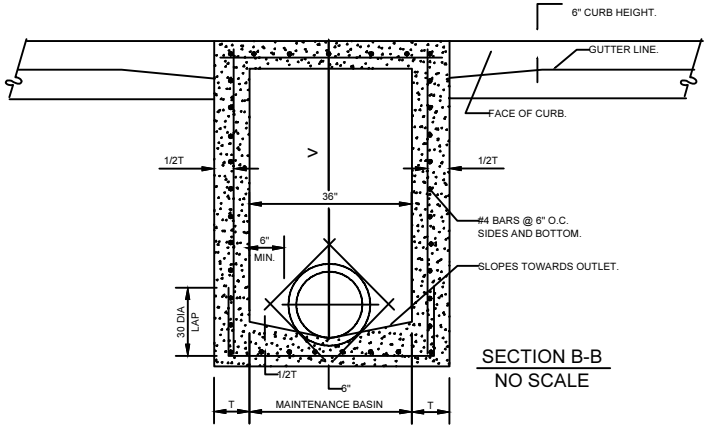

SECTION B-B
NO SCALE

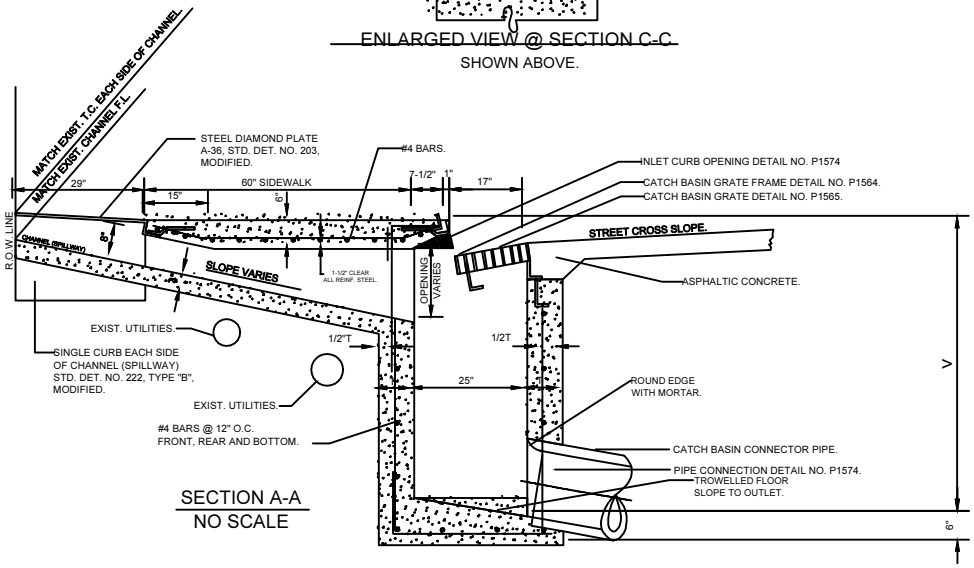

SECTION A-A
NO SCALE

DETAIL NO.	City of Phoenix STANDARD DETAIL	CATCH BASIN – TYPE "L–R" MODIFIED (WITH REAR INLET)	APPROVED CITY ENGINEER 12/10/2012 DATE	DETAIL NO.
P1583				P1583

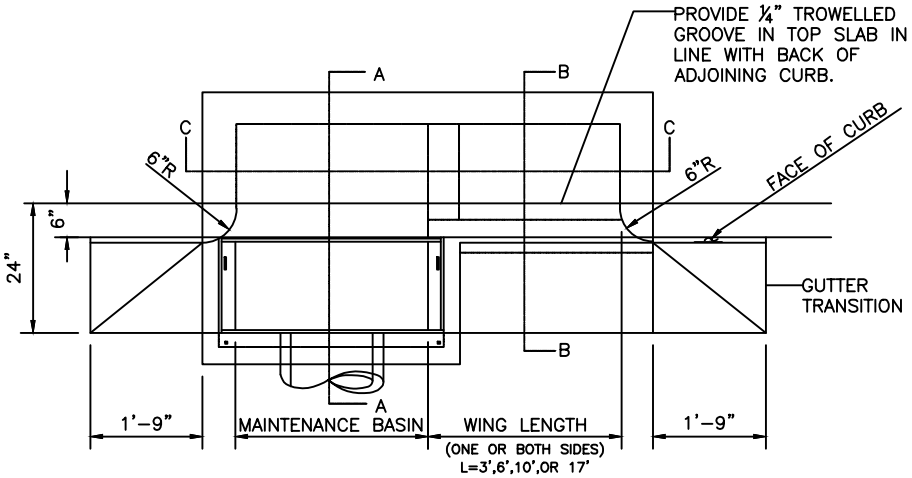

PLAN VIEW

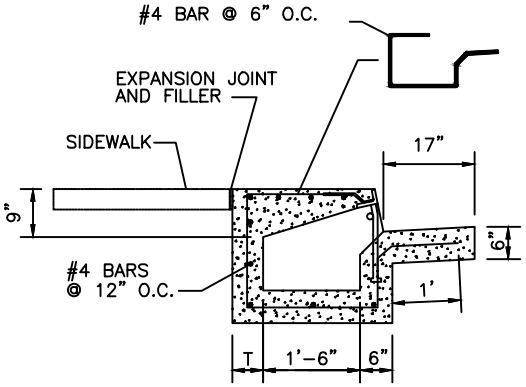

SECTION B–B

1. ALL CONCRETE SHALL BE CLASS "A".
2. ALL REINFORCING STEEL SHALL BE DEFORMED BARS AND SHALL CONFORM TO A.S.T.M. SPECIFICATION NO. 615.
3. CONNECTOR PIPES MAY BE PLACED IN ANY WALL AS PER PLAN.
4. FLOOR BASIN SHALL BE TROWELLED TO A HARD SMOOTH SURFACE AND SHALL SLOPE FROM ALL DIRECTIONS TO OUTLET.
5. CONSTRUCTION DRAINS SHALL BE INSTALLED IN ALL INLETS BUILT WITH PAVING PROJECTS (SEE DETAIL P1575).
6. CONNECTOR PIPE SHALL BE TRIMMED TO THE FINAL SHAPE AND LENGTH BEFORE CONCRETE IS POURED.
7. THE FRAME SHALL BE DETAIL P1564, TYPE 2 AND THE GRATE SHALL BE DETAIL P1565, TYPE 2.
8. TYPES ARE DESIGNATED AS FOLLOWS:
   "R" MODIFIED -- NO WING;
   "R–1" MODIFIED -- ONE WING;
   "R–2" MODIFIED -- TWO WINGS.
9. INSTALL ONE CITY FURNISHED POLLUTION AWARENESS MARKER (PAM) AT EACH CATCH BASIN, AS DIRECTED BY THE ENGINEER.

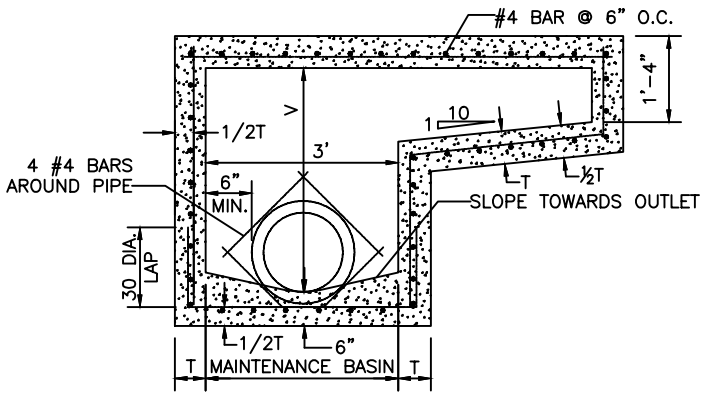

SECTION C–C

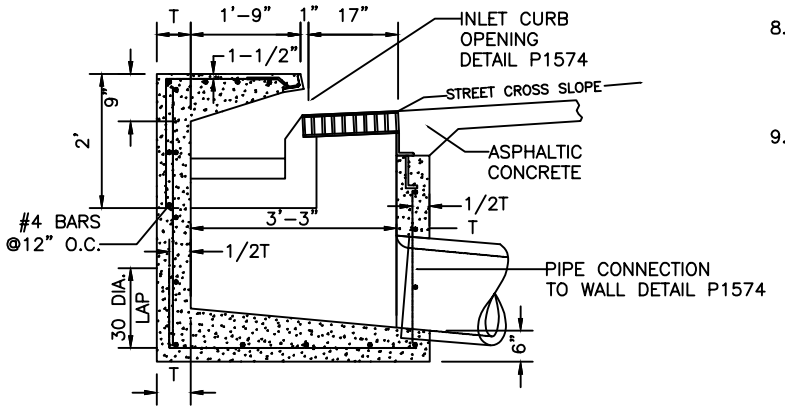

SECTION A–A

CATCH BASIN WALL THICKNESS & DEPTH
T=6" IF V=8' OR LESS. T=8" IF V=8'–1" TO 16'. V=4'–0" UNLESS OTHERWISE SPECIFIED.

DETAIL NO.	City of Phoenix STANDARD DETAIL	CATCH BASIN – TYPE "R" MODIFIED (WITH WING AND OFFSET OPENING)	APPROVED CITY ENGINEER 12/10/2012 DATE	DETAIL NO.
P1584				P1584