# Addendum to the Design Standards Manual for Water and Wastewater Systems

## 1.0 PURPOSE OF ADDENDUM

### 1.1 INTRODUCTION

The purpose of this addendum is to provide construction specifications and design standards promulgated by the City of Phoenix during the planning and construction of METRO's light rail project. This addendum forms a part of the Design Standards Manual for Water and Wastewater Systems and is to be consulted in the design and execution of all light rail-related water and sanitary sewer relocations within the City of Phoenix.

The light rail project will have design and construction features that are unique to utility relocation in the vicinity of the light rail tracks. Light rail systems have a zone in which the location of utilities is restricted due to poor future access to the utilities once the light rail system is in place. For the light rail project, the restricted utility area (RUA) extends horizontally 16 feet from the centerline of the tracks and vertically 6 feet below grade. All existing water and sanitary sewer utilities running parallel with tracks within the RUA will need to be relocated out of the RUA. All existing water and sanitary sewer utilities crossing the RUA will need to be relocated a minimum of 6 feet below grade and encased. All relocated piping and appurtenances will be replaced with new facilities.

In addition any future work for private development that requires a crossing of the RUA will be governed by these standards.

## 1.2 HOW TO USE

The provisions of this addendum are limited in their application and scope to light rail-related water and sanitary sewer relocations and for future work performed for private development within the Light Rail corridor.

All applicable provisions of the Design Standards Manual for Water and Wastewater Systems not otherwise modified or replaced by this addendum are controlling. Insofar as the original manual is inconsistent, this addendum governs. If there is a conflict between the design standards manual and the terms and provisions of this addendum, the terms and provisions of this addendum shall control.

The chapters and sections referred to in the headings of this addendum correspond with the chapter and section tabs in the design standards manual. Any capitalized terms not otherwise defined herein shall have the meanings set forth in the manual.

## 1.3 EFFECTIVE DATE

This addendum to the Design Standards Manual for Water and Wastewater Systems will become effective November 1, 2007.

All construction contracts advertised and all permits issued on or after November 1, 2007 will be governed by this addendum.

## *2.0 ADDENDUM TO DESIGN STANDARDS MANUAL*

# HIGHLIGHTS AND REVISIONS TO DESIGN STANDARDS MANUAL

| Design Standards Manual Page | Revision Number | Date | Description of Change |
|---|---|---|---|
| 1 | 2.0 | | Purpose – incorporate light rail construction specifications |
| 6 | 2.0 | | Abbreviations – additional abbreviations |
| 25 | 2.0 | | Hazardous & Contaminated Substances – new requirement |
| 25 | 2.0 | | Community Notification & Involvement – requiring greater public outreach |
| 28 | 2.0 | | Thrust Restraint – additional installation requirements |
| 28 | 2.0 | | Separation from Sanitary Sewer Mains – revised minimum vertical separation |
| 29 | 2.0 | | Fire Hydrant Requirements – additional appendix |
| 30 | 2.0 | | Design Life – new requirement |
| 30 | 2.0 | | Poles & Other Structures – new requirement |
| 30 | 2.0 | | Private Utility Relocations – new requirement |
| 30 | 2.0 | | Parallel Utility Relocations – new requirement |
| 30 | 2.0 | | Utility Track Crossings – new requirement |
| 32 | 2.0 | | Location/Alignment – additional installation requirement |
| 32 | 2.0 | | Fire Hydrant Spacing – promulgating maximum spacing along light rail route |
| 33 | 2.0 | | Line Valves – additional marking requirements |
| 37 | 2.0 | | Table 3.7 permitting installation of meter service connections in sidewalks |

| Design Standards Manual Page | Revision Number | Date | Description of Change |
|---|---|---|---|
| 38 | 2.0 | | Water Distribution System Plan Requirements – adding disinfection testing |
| 38 | 2.0 | | Water Service Taps – adding tapping procedures |
| 38 | 2.0 | | Service Connections & Meters – procedures for abandoning saddle taps |
| 48 | 2.0 | | Plan Requirements Checklist – renumbered; new requirements for abandoning service connections and water mains, salvaging fire hydrants |
| – | 2.0 | | Water Service Shutdown – new section incorporating water shutdown accommodation guidelines and requirements, submittal process for Detailed Construction Shutdown Plan |
| – | 2.0 | | Shutdown Notification Plan and Requirements – new sections |
| – | 2.0 | | Cathodic Protection System – new section |
| 67 | 2.0 | | Hazardous & Contaminated Substances – new requirement |
| 67 | 2.0 | | Design Life – new requirement |
| 67 | 2.0 | | Capacity – new requirement |
| 67 | 2.0 | | Poles & Other Structures – new requirement |
| 67 | 2.0 | | Private Utility Relocations – new requirement |
| 67 | 2.0 | | Parallel Utility Relocations – new requirement |
| 67 | 2.0 | | Utility Track Crossings – new requirement |
| – | 2.0 | | CCTV Inspection Procedures – new section |
| 78 | 2.0 | | Sewer Main Connections at Manholes – additional requirements for pipe materials |

| Design Standards Manual Page | Revision Number | Date | Description of Change |
|---|---|---|---|
| 85 | 2.0 | | Thrust Restraint – additional installation requirements |
| – | 2.0 | | Sewer Abandonment – new section |
| – | 2.0 | | Bypass Pumping – new section |
| – | 2.0 | | Sewer Line Odor Control – new section |

## 2.1 DELETIONS AND ADDITIONS TO DESIGN STANDARDS MANUAL

1. **Chapter 1, Section 1.1 Purpose, DELETE:**

   The manual applies to existing systems being expanded, modified, upgraded and rehabilitated as well as to the construction of new facilities. The manual is not intended to be used as a construction specification.

   **And REPLACE WITH:**

   The manual applies to existing systems being expanded, modified, upgraded and rehabilitated as well as to the construction of new facilities. The manual is not intended to be used as a construction specification but for those construction specifications promulgated for use in the design and construction of water and sanitary sewer relocations pursuant to any light rail-related project.

2. **Chapter 1, Section 1.6 Abbreviations, ADD:**

   Abbreviations used in the addendum to this manual can be found in APPENDIX A to this addendum.

3. **INSERT NEW subsection:**

   Chapter 3, Section 3.3.3A Hazardous and Contaminated Substances

   There is the potential for encountering hazardous and contaminated substances within project boundaries. Health and safety shall be the sole responsibility of the contractor. The contractor shall perform all work in a safe and environmentally acceptable manner. The contractor shall provide for the safety of all contractor personnel, City of Phoenix personnel and the public for the duration of the project. The contractor shall have in place a hazardous and contaminated substance health and safety program conforming to applicable federal, state and local statutes, rules, regulations and ordinances.

4. **Chapter 3, Section 3.3.4 Community Notification and Involvement, DELETE:**

   The City has made a commitment to early citizen notification and involvement. The goal of identifying neighborhood concerns has a high priority. Communication through printed notice, a public information phone number and public presentations could be a necessary element in construction plan approval.

**And REPLACE WITH:**

The City has made a commitment to early citizen notification and involvement, and identifying neighborhood concerns is given a high priority. Communication via printed notice, a public information phone number and public presentations shall be necessary elements for construction plan approval.

**5. Chapter 3, Section 3.3.9 Thrust Restraint ADD:**

All water pipelines shall be designed with adequate thrust restraint systems. All existing pressure pipe thrust restraint systems shall be protected, restored or replaced as required. Where existing thrust block bearing soils are disturbed, new thrust restraint systems shall be designed and installed. Allowable systems are positive restraint joints and friction type joints (e.g., Mega-lugs). The use of thrust blocks are allowed only where new, restrained pipelines connect to non-restrained systems.

**6. Chapter 3, Section 3.3.11 Separation from Sanitary Sewer Mains, DELETE:**

1. Vertical clearance between water mains and gravity sanitary sewer mains: the water main shall not be less than 12-inches above the sanitary sewer main, even if the sewer main is constructed with ductile iron pipe in accordance with Note 3B in MAG Standard Detail No. 404-1.

**And REPLACE WITH:**

Minimum clearance from edge of pipe to edge of pipe between water and sanitary sewer pipelines is 6 feet horizontal and 2 feet minimum vertical separation, with the water pipeline above the sewer line. Where these separation criteria cannot be met, construction of the water and sewer shall be in accordance MAG Standard Detail No. 404.

**7. Chapter 3, Section 3.3.16 Fire Hydrant Requirements, DELETE:**

***NOTE***: *See also Appendix K.*

**And REPLACE WITH:**

***NOTE****: See also APPENDIX K to the manual and APPENDIX B to this addendum.*

**8. INSERT NEW subsection:**

Chapter 3, Section 3.3.19 Design Life

All relocated or rehabilitated public utilities within the project work limits and planned right-of-way limits shall meet general design and construction

requirements for a minimum fifty (50) year design life. Design life is defined as the period of time for which a facility is expected to perform its intended function.

**9. INSERT NEW subsection:**

Chapter 3, Section 3.3.20 Poles and Other Structures

Poles and other structures shall be placed in locations that do not conflict or interfere with the maintenance, repair or replacement of existing or proposed water utilities.

A minimum 6-foot clearance shall be provided from the closest outside edge of the structure to the outside edge of any public utility. If a 6-foot clearance is not possible, the bottom elevation of the pole or other structure foundation shall extend a distance below the flow line of the adjacent utility that will allow excavation of the utility without impacting the structural integrity of the foundation.

**10. INSERT NEW subsection:**

Chapter 3, Section 3.3.21 Private Utility Relocations

Existing and proposed locations of WSD utilities shall take priority over private utility relocations as specified herein. Private utilities shall not be relocated above the "pipe corridor" of water utilities. The "pipe corridor" shall be defined as the limits 6 feet from the outside diameter of the water pipe to said utility, with additional reasonable offset to accommodate safe excavation of deeper utilities without undermining more shallow utilities (1 to 1 slope preferred).

**11. INSERT NEW subsection:**

Chapter 3, Section 3.3.22 Parallel Utility Relocations

Except as provided herein, all water utilities within the light rail track and within the RUA shall be relocated outside the RUA as specified. See APPENDIX C to this addendum for typical diagrams of the RUA and utility relocation locations.

All utility relocations shall meet federal, state and local requirements for drinking water, including but not limited to the ADEQ requirements of potable water systems' horizontal vertical clearance above sanitary and storm sewer pipelines.

1. Pipeline Locations. Utility pipe design locations shall minimize length of service laterals and minimize traffic impacts for future operation, maintenance and service repairs. Where possible, utility pipelines shall

be relocated such that valve box covers are in the center of roadway shoulders, turn lanes or automobile traffic lanes for maintenance access, operation safety, and to minimize repetitive live wheel loads on box covers.

Valve boxes shall not be located within the RUA without explicit written approval from the WSD. Public utilities pipelines shall not be located under concrete curbs or gutters.

2. Relocation Deflections. The number and degree of deflections required for relocation of pipelines shall be limited to minimize system hydraulic head losses, bottlenecks, thrust restraint requirements or potential maintenance problems.

**12. INSERT NEW subsection:**

Chapter 3, Section 3.3.23 Utility Track Crossings

All water piping that crosses the light rail track shall be replaced with new pipe and encased in steel or high density polyethylene (HDPE) casing. If the existing piping crosses within the RUA, it shall be lowered below the RUA and encased in steel or HDPE casing across the limits of the RUA. Replacement limits of the piping shall be to the nearest intersecting main outside the RUA.

All water pipes crossing the light rail project shall have corrosion protection in accordance with the requirements of the Cathodic Protection System Requirements found in Appendix E.Water pipeline replacements under the light rail project shall have new isolation valves installed at the replacement limits (connections to existing pipe), unless there is an existing in-line valve located within 20 feet of the replacement limits. If there is an existing in-line valve located within 20 feet of the replacement limits specified above, then the contractor, consultant or private developer shall replace pipe to said valve.

Limits of casings under the track bed shall extend across the limits of the RUA. The casing shall have the following characteristics:

1. Casing Materials:

   - ASTM A36 Steel with coating; HDPE solid wall pipe manufactured by Chevron Phillips using PE 3408 material or equal; HDPE smooth interior corrugated pipe casing, ADS Systems N12 WT 1B or equal.

   - Casing wall thickness shall be sufficient for dead and live load requirements, with a minimum 2.0 safety factor.

- Steel casing shall have a factory applied tape wrap corrosion protection coating.

- All casing joints shall be watertight to 10.8 psi in accordance with ASTM D3212.

- ADS Systems N12 WT 1B may only be used for casings up to 24 inches in diameter.

2. Casing Size: casing diameter shall be as follows:

   - Casing for Mains: casing inside diameter shall be equal to or greater than the carrier pipe bell or coupling outside diameter plus a minimum of 6 inches.

   - Water Services: water services 1 inch and smaller shall have a minimum 4-inch-diameter casing; 1¼ inch through 2 inch services require a minimum 6-inch casing. Services larger than 2 inch diameter require casings 6 inches larger than the bell O.D. or fitting as described above.

3. Casing/Carrier Pipe Spacers and Insulators: the carrier pipe shall be installed with casing insulators banded to it for support and isolation. Refer to APPENDIX C to this addendum (Detail LRT 9).

4. Annular Space: the annular space shall be filled with blown sand. See Detail LRT 9 in Appendix C.

5. Casing End Seals: All casing shall be installed with pre-manufactured casing/carrier end seals intended for such use. Refer to APPENDIX C to this addendum (Detail LRT 9). No venting of the casings is required for water and sewer utility crossings.

**13. Chapter 3, Section 3.4.4 Location/Alignment, ADD:**

Preferred water main location is 2 feet from lip of gutter as shown in the drawings incorporated as APPENDIX C. Water mains shall not be installed under curb and gutter, and existing water mains and valves under relocated curbs and gutters shall be relocated. Water pipelines shall not be located within 4 feet of tree wells.

**14. Chapter 3, Section 3.4.6 Fire Hydrant Spacing, ADD:**

Fire hydrants shall be provided along the roadway on each side of the light rail system with a maximum spacing between fire hydrants of 300 feet. Refer to APPENDIX C to this addendum (Detail LRT 1). All relocated and new fire hydrants and appurtenant piping shall be replaced and provided in accordance with requirements of the Fire Marshall and PFD.

**15. Chapter 3, Section 3.4.7 Line Valves, ADD:**

7. All valve boxes shall be raised to grade and made accessible to WSD staff at all times during construction. If valve boxes are temporarily buried during construction, the contractor shall immediately remedy the situation by performing the preferred precedence actions:

   a. Expose valve boxes to current grade to maintain access.

   b. Mark valve box location with nail and shiner.

   c. Paint the perpendicular distance (to the nearest foot) of the valve box location on adjacent curb using blue paint to permit two-taping (swing ties). Paint marking shall be identified with the symbol "WV" followed by the perpendicular measurement.

**16. Table 3.7 Water Meter Sizing Table DELETE:**

*[Note] 5. Meter service connection location in other than a residential subdivision must be out of traveled roadway/walk. They may be located in a planter area, parking lot island, etc. and shall be sufficiently above finish grade to minimize flooding. Meter locations shall be easily accessible from a street.*

**And REPLACE WITH:**

*[Note] 5. The meter service connection shall be located outside of the traveled roadway and within the Right-of-Way. Connections may be located in a planter area, parking lot island, etc., and shall be sufficiently above finish grade to minimize flooding. If necessary, the meter may be located in the sidewalk, although alternative locations are preferable. Meter locations shall be easily accessible from a street and 6 inches minimum from back of curb or edge of sidewalk.*

**17. Chapter 3, Section 3.4.10 Water Distribution System Plan Requirements – Check Lists, ADD:**

***NOTE:*** *Disinfection Testing. In accordance with MAG Specification 611, satisfactory water quality must be maintained for a 48-hour period during disinfection testing of potable water systems. The City of Phoenix does permit use of the 24-hour coliform bacteria presence/absence test method for bacteria testing of water lines. Regardless of test method chosen, it must be approved by ADEQ.*

*Certification of ADEQ's approval of the test method used by the testing laboratory for each line section must be provided to the City of Phoenix. This can be accomplished through the submittal process pursuant to CDRL 02512-1.*

*Best management practices for protecting existing water mains opened for construction shall be implemented. Best management practices should include, but are not limited to, the following:*

- *preventing debris from entering the opened pipe*
- *excavating a sump in the trench for pumping out the water and preventing water that has been in contact with the ground to enter the open pipe*
- *covering/sealing ends of existing lines removed from service to prevent intrusions of contaminants*
- *covering/sealing the ends of the pipe during storage and construction and after construction hours to prevent any intrusion of contaminates*

*The entire portion of existing water main which is removed from service must be disinfected if it has been exposed to the atmosphere for longer than 24 hours. This can be accomplished through the following step:*

- *The entire water main (both the new and existing lines) shall be disinfected between the closed line valves after the new main and the existing main have been tied in.*

*Applicable state regulations governing bacteria testing methods can be found at A.A.C. R18-4-106 (requiring use of approved analytical methods), R18-4-107 (requiring the use of a licensed laboratory) and R18-4-108 (requiring ADHS/EPA approval for sample collection, preservation and transportation procedures).*

**18. INSERT NEW subsection:**

Chapter 3, Section 3.4.11 Water Service Taps (Tapping Procedures)

The following procedure is to be followed for all tapping operations on existing water mains:

- WSD shall be contacted to schedule the tap.
- Per MAG Specification 610, all earth work, shoring access, fittings and materials for the tap shall be provided and installed by the contractor, consultant or private developer prior to scheduling the tap.
- The contractor, consultant or private developer shall be responsible for ensuring the excavation for the tapping equipment is large enough to accommodate the appropriate tapping machine.

- WSD and METRO inspectors shall be contacted 48 hours prior to the scheduled tapping date to arrange for the tap.
- The tapping saddle shall be disinfected prior to the actual tap.
- WSD personnel will perform the tap.
- Service installation and backfill are to be completed by the contractor, consultant or private developer.
- Size on size taps may be performed only on ductile iron pipe using full-circle stainless steel tapping saddles such as PowerSeal Model 3460AS or approved equal.

**19. INSERT NEW subsection:**

Chapter 3, Section 3.4.12 Tapping Saddle Abandonment

The established procedure for abandoning tapping saddles within the City of Phoenix is as follows:

1. WSD, or its designated representative, shall be notified whenever an existing tap-to-be-abandoned is fully exposed. Such notification shall request inspection of the service saddle and corporation stop by WSD (or its designated representative) to determine the condition of the assembly. At the time of inspection, WSD, or its designated representative, will determine whether the tapping saddle and corporation stop should be replaced with a repair sleeve, or the corporation stop capped and the tapping saddle and corporation stop left in place.

2. The criteria for either abandonment in place or removal of the existing tapping saddle and corporation stop are based on the condition of the existing equipment and the type of material used in its composition and construction. If the service saddle and the corporation stop are in good condition and composed of the correct style and type of materials, as determined by WSD (or its designated representative), the corporation stop may be closed, the open end of the corporation stop capped and the service saddle abandoned in place. The correct style for the service saddle is a double strap saddle. Single strap saddles and direct taps of corporation stops are not allowed.

3. If the service saddle or corporation stop is deemed unacceptable by WSD (or its designated representative) because of type of style, material and condition, the saddle and stop shall be removed and a full-circle, stainless steel repair sleeve shall be installed at the tap location. A PowerSeal, model 3122AS, Smith Blair 262 full circle repair clamp or a Muller 550 Series full seal all-stainless repair clamp shall be used.

4. The cost for the removal and replacement of the service saddle and corporation stop shall be paid under the "Remove and repair existing service connection" bid item.

**20. Chapter 3, Section 3.8.1 Plan Requirements Checklist, RE-NUMBER to Section 3.8.3**

**And INSERT NEW subsection:**

Chapter 3, Section 3.8.1 Service Connection Abandonment

All existing water service lines to be abandoned shall be completely removed from the corporation stop/valves to the existing water meter. The corporation stop or existing valve, as necessary, shall be closed at the main prior to removal of the piping.

**21. INSERT NEW subsection:**

Chapter 3, Section 3.8.2 Water Main Abandonment

It is the intent of the Water Services Department that water mains be completely removed from the right-of-way at the time of abandonment. There may be instances where WSD allows abandoned water mains to remain due to special circumstances. In those cases water mains shall be cut and plugged per Department Detail P1343.

All abandoned water mains left in place shall be filled with controlled low strength material (CLSM). The contactor shall completely fill the abandoned sections with CLSM. CLSM may be pumped or gravity fed into one end of the abandoned pipe section. Voids in the CLSM will not be permitted. CLSM shall meet the slump and strength requirements for "1 sack CLSM" as specified in MAG Specification 728. The contractor shall install temporary vent pipes prior to filling the abandoned sections with CLSM. The vent pipes will remain intact until the abandoned sections have been completely filled with CLSM and the work has been inspected. After approval from the engineer or construction manager, the vent shall be removed and the holes backfilled.

The contractor shall dewater proposed water lines prior to filling them with CLSM. The water from the proposed abandoned water pipe lines shall be chlorine tested, de-chlorinated if necessary, and disposed of as approved by the City of Phoenix.

**22. INSERT NEW subsection:**

Chapter 3, Section 3.8.4 Salvage of Fire Hydrants

All fire hydrants on abandoned water mains shall be salvaged and delivered to the City of Phoenix's Surplus Yard, located at 3045 S. 22nd Ave., Phoenix (602) 262-5072.

**23. INSERT NEW section:**

Chapter 3, Section 3.9 Water Service Shutdown

**24. INSERT NEW subsection:**

Chapter 3, Section 3.9.1 Water Shutdown Accommodation Guidelines

***NOTE:*** *These guidelines do not address situations involving fire service connections.*

For the purposes of this subsection, the term "contractor" can mean any party (contractors, engineers or City forces) requiring a planned shutdown.

These are intended to be guidelines only and allow a degree of flexibility in working with the affected water customer.

1. Initial Contact with Water Customers

   The City has made a commitment to early citizen notification and involvement. All water customers impacted by a planned shutdown shall be notified at least one week in advance of the shutdown date. Face-to-face communication at the residence or place of business is the preferred method of contact. The contractor, consultant, private developer or his representative shall provide the water customer the following information:

   - date of the shutdown
   - time and duration
   - known customer service connections impacted (including firelines)
   - contractor, consultant or private developer contact telephone numbers (prior to the shutdown and contractor emergency number during the shutdown)
   - any other notification requirements required under METRO contract specifications

2. Recognition and Consideration of Customer Issues

   During contact with water customers, the contractor, consultant or private developer shall solicit any particular concerns or circumstances impacting customers during the proposed shutdown. Water customers should be allowed to offer and suggest alternate timelines for the shutdown.

   Heightened efforts for clear and interactive communications shall be undertaken for the following customers. Absent any alternate arrangements or agreements between the contractor, consultant or private developer and a water customer impacted by a temporary water service disruption, *these customers will be provided with continuous water service* that meets the minimum needs of the customer:

   (These have previously been identified as Light Rail "Critical Customers")

   - 24-hour health care facility
   - beauty shop/day spa
   - day care facility
   - dialysis center
   - elderly housing
   - facilities with fire protection systems
   - hospital
   - hotel/motel
   - individual with mobility limitations
   - individual with serious medical concerns
   - major employer (50+ employees)
   - major food preparation facility/restaurant
   - nursing home

3. Accommodations during Shutdown Events

   To the extent practical, and in consideration of the varying needs of multiple customers involved in a single shutdown event, the contractor is expected to review the requirements of each impacted water customer and to provide adequate services, including the following, for any and all impacted customers:

   - adjustment to the shutdown date

   - adjustments to the shutdown window (start and finish time of scheduled shutdown)

   - consideration of multiple, shorter-duration shutdown periods (should that appear more practicable for customers)

**25. INSERT NEW subsection:**

Chapter 3, Section 3.9.2 Water Shutdown Requirements

The purpose of these regulations is to clarify City of Phoenix requirements for planning and conducting the shutdown of water mains.

1. WSD, or its designated representative, shall determine the dates upon which each water distribution main segment can be shut down.

2. The WSD, or its designated representative, shall identify the entire length of water line that will be shut down as a result of the valve closures. The WSD will provide information showing location and parcel number only of affected customers. The WSD will not provide names or addresses of affected customers. The contractor, consultant or private developer is required to gather all required information when conducting the affected customer interviews.

3. Specific customer service shutdown requirements shall be determined by the contractor, consultant or private developer through interviews with each affected customer and fire department representatives prior to scheduling the shutdown.

4. Contractor-requested shutdowns of water distribution mains shall be based on information gathered from affected customers per Section 3.9.1. A Utility Relocation Construction Plan and Schedule shall be provided prior to submittal of the Detailed Shutdown Schedule to ensure coordination of shutdown activity with WSD or its designated representative.

5. The maximum allowable shutdown time shall typically be no longer than 8 hours. The maximum allowable time shall be defined as the time that any of the affected customers are without functional water service. No shutdown will be allowed without the notification of the affected customers. The contractor, consultant or private developer is responsible to coordinate shutdown time and duration with the affected customers to minimize disruption of service.

6. Temporary piping, valve and fitting requirements for continuous water service shall be the responsibility of the contractor, consultant or private developer. The contractor, consultant or private developer shall determine the need for temporary services through the information gathered during interviews with each affected customer. It is the contractor's, consultant's or private developer's responsibility to minimize impact to the affected customer during the service outage. All cost for temporary piping, coordination, affected customer interviews, planning, engineering and implementation of temporary piping will be considered subsidiary to the applicable bid item.

7. The WSD, or its designated representative, shall identify the water utility valves that need to be closed, along with the utility valve numbers and locations to accommodate work requiring a shutdown.

8. It is to be understood that the existing water transmission and distribution systems are operating systems and that equipment such as valves, air release valves and fire hydrants may at times fail to operate as expected due to the age of the equipment. In the event that any such equipment fails to operate properly during a shutdown, the contractor, consultant or private developer shall not be entitled to any additional cost or time extension due to the failure. The WSD will make every effort to minimize equipment failures and, in the event of a failure, the shutdown may be re-scheduled as soon as the affected customers can be re-notified and the valve closure can be re-scheduled.

9. In cases during extended shutdown, where a portion of the existing main is taken out of service creating a dead-end condition, which, in the opinion of the WSD or its designated representative, creates a potential for water quality degradation, the contractor, consultant or private developer (at its own expense) shall install a flushing connection and shall flush the line as necessary to maintain chlorine residual indicative of normal operation.

***Note**: For preparation of shutdown plans, refer to the appropriate forms in APPENDIX D to this addendum.*

When shutdowns are permitted on transmission mains, the shutdown duration shall be restricted to the minimum period of time required to complete the work. All shutdowns of distribution and transmission main constraints shall be dictated by WSD. The WSD, and its designated representative, will determine these constraints and the contractor, consultant or private developer shall update its construction schedule and sequence to take the constraints into account. Under no circumstances shall the contractor be entitled to additional compensation or time extension due to WSD requirements for shutdown.

Typically, transmission mains (16-inches in diameter and larger) cannot be shut down between May 15 and October 1 during peak water demand.

**26. INSERT NEW subsection:**

Chapter 3, Section 3.9.3 Detailed Construction Shutdown Plan Submittal

The contractor, consultant or private developer shall prepare and submit a Detailed Construction Shutdown Plan for each relocation, tap or tie-in activity requiring a water shutdown. The Plan shall be submitted a minimum of 45 working days prior to the proposed shutdown date. Under no circumstances shall the contractor, consultant or private developer begin

relocation work on a pipe segment requiring shutdown without the WSD's, or its designated representative's, approval of the Plan. The Detailed Construction Shutdown Plan submittal shall incorporate the comments and information provided by WSD on the Utility Relocation Construction Plan and Schedule. The Detailed Construction Shutdown Plan submittal for each segment shall include the following information:

a. completed forms SD-1 through SD-9 and WT-1 (provided at APPENDIX D to this addendum)

b. detailed hour-by-hour schedule of the work to be performed during the shutdown period

c. materials and equipment required for each shutdown, tap or tie-in

d. updated drawings that illustrate the extent of the existing utility to be shut down in order for the contractor to complete the relocation work

e. if the water main is being disinfected, the drawing should show bacti sample location(s) and the source water for flushing the water main

f. diagrams showing the installation of temporary valves, fittings and other appurtenances to maintain service to customers during construction, if necessary

g. Notification Plan as described below. The notification confirmation column on Form SD-4 shall be completed prior to the planned shutdown date.

**27. INSERT NEW subsection:**

Chapter 3, Section 3.9.4 Shutdown Notification Plan

As part of the Detailed Construction Shutdown Plan, the contractor shall prepare and submit a Shutdown Notification Plan to WSD, or its representative, for approval. The contractor shall not be permitted to proceed with the work until WSD has approved the Shutdown Notification Plan.

At a minimum, the Shutdown Notification Plan shall include the following:

1. A sample of the means and methods for notifying customers affected by the construction and shutdown. The means and method of notification of residential customers can be a flyer that can be delivered to those affected. Commercial customer notification will require direct contact with the customer. At a minimum, the notification shall state the following:

- purpose of the shutdown
- anticipated impact on the customer
- expected shutdown start time and duration
- contractor's 24-hour project hotline number that is staffed during the daytime, is bi-lingual (English/Spanish) and plays a recorded message with emergency numbers for night time use
- contractor's mailing address and field location
- instruction to the affected customers to call-in or send written notification that they received the notification, and whether the customer has any special requirements for the temporary discontinuation of water service
- A sample notification flyer is provided in APPENDIX D, Form SD-8.

**28. INSERT NEW subsection:**

Chapter 3, Section 3.9.5 Shutdown Notification Requirements

Once the WSD and its representative have approved the contractor's Shutdown Notification Plan, the contractor shall adhere to the following requirements:

1. Notify the WSD and its representatives of the shutdown 14 days prior to the start of construction.
2. Notify the City of Phoenix Fire Department of any hydrants or fire services out of service as a result of the shutdown 14 days prior to the start of construction. Use Form SD-9 (APPENDIX D) for Fire Department notification.
3. Complete the general customer notification 7 days prior to the planned shutdown date.
4. Collect signatures/initials or letters of acknowledgement from customers who received the shutdown notification. This information shall be reflected in Form SD-4 (APPENDIX D).
5. Re-notify affected customers 24 hours before the planned shutdown.

The contractor shall make every effort to notify and collect the proper signature/acknowledgement from affected customers. The contractor shall also have the sole responsibility of documenting the construction and shutdown notification process.

The WSD and its representative shall examine the contractor's construction and shutdown notification list and supporting documentation for completeness. However, this does not relieve the contractor of their responsibility to provide a complete and thorough list. The WSD will not operate any water main valves for shutdown or perform the tie-ins until the construction and shutdown notification list has been verified, or until all construction and shutdown notification requirements have been met by the contractor.

In the event the duration of the shutdown exceeds the planned and notified shutdown duration and schedule, the contractor will immediately notify affected customers of the extended duration of the shutdown and the expected time of return of service. The contractor shall immediately make available bottled water to affected customers, and have available bulk water supplies such as potable water tanks or trucks.

**29. INSERT NEW Section:**

Chapter 3, Section 3.10 Cathodic Protection System (CPS)

Refer to APPENDIX E of this addendum for CPS requirements.

**30. INSERT NEW subsection:**

Chapter 5, Section 5.1.4A Hazardous and Contaminated Substances

There is the potential for encountering hazardous and contaminated substances within project boundaries. Health and safety shall be the sole responsibility of the contractor. The contractor shall perform all work in a safe and environmentally acceptable manner. The contractor shall provide for the safety of all contractor personnel, City of Phoenix personnel and the public for the duration of the project. The contractor shall have in place a hazardous and contaminated substance health and safety program conforming to applicable federal, state and local statutes, rules, regulations and ordinances.

**31. INSERT NEW subsection:**

Chapter 5, Section 5.1.6 Design Life

All relocated or rehabilitated public utilities within the project work limits and planned right-of-way limits shall meet general design and construction requirements for a minimum fifty (50) year design life.

**32. INSERT NEW subsection:**

Chapter 5, Section 5.1.7 Capacity

All relocated facilities shall meet or exceed the design conveyance capacity of the existing facilities being replaced. All relocated gravity pipelines shall maintain existing grade and a minimum cleaning velocity. All gravity systems shall remain positive draining systems. Sewer siphons, "bubble-up" manholes, off-set manholes, lift stations and the like will not be allowed unless the WSD consents in writing.

**32. INSERT NEW subsection:**

Chapter 5, Section 5.1.8 Poles and Other Structures

Poles and other structures shall be placed in locations that do not conflict or interfere with the maintenance, repair or replacement of existing or proposed sanitary sewer utilities.

A minimum 6-foot clearance shall be provided from the closest outside edge of the structure to the outside edge of any public utility. If a 6-foot clearance is not possible, the bottom elevation of the pole or other structure foundation shall extend a distance below the flow line of the adjacent utility that will allow excavation of the utility without impacting the structural integrity of the foundation.

**34. INSERT NEW subsection:**

Chapter 5, Section 5.1.9 Private Utility Relocations

Existing and proposed locations of WSD utilities shall take priority over private utility relocations as specified herein. Private utilities shall not be relocated above the "pipe corridor" of sanitary sewer utilities. The "pipe corridor" shall be defined as the limits 6 feet from outside diameter of said utility, with additional reasonable offset to accommodate safe excavation of deeper utilities without undermining more shallow utilities (1 to 1 slope preferred).

**35. INSERT NEW subsection:**

Chapter 5, Section 5.1.10 Parallel Utility Relocations

Except as provided herein, all sanitary sewer utilities within the light rail track and within the RUA shall be relocated outside the RUA as specified. See APPENDIX C to this addendum for typical diagrams of the RUA and utility relocation locations.

All utility relocations shall meet federal, state and local requirements for drinking water, including, but not limited to, ADEQ's requirement of potable

water systems' horizontal vertical clearance above sanitary and storm sewer pipelines.

3. Pipeline Locations: Utility pipe design locations shall minimize length of service laterals and minimize traffic impacts for future operation, maintenance and service repairs. Where possible, utility pipelines shall be relocated, such that manhole frames and covers are in the center of roadway shoulders, turn lanes or automobile traffic lanes for maintenance access, operation safety, and to minimize repetitive live wheel loads on box covers.

   Existing and proposed manholes shall not be located within the RUA without explicit written approval from the WSD. Public utilities pipelines shall not be located under concrete curb or gutter.

4. Relocation Deflections: The number and degree of deflections (sewer manholes, pressure pipe bends, etc.) required for relocation of pipelines shall be limited to minimize system hydraulic head losses, bottlenecks, thrust restraint requirements or potential maintenance problems. All gravity sewer bends, deflections, grade adjustments or pipe size changes shall occur at manholes or cleanout boxes.

**36. INSERT NEW subsection:**

Chapter 5, Section 5.1.11 Utility Track Crossings

All sewer piping that crosses the light rail track shall be replaced with new ductile iron pipe coated with Protecto 401 epoxy coating and encased in steel or high density polyethylene (HDPE) casing. If the existing piping crosses within the RUA, it shall be lowered below the RUA and encased in steel or HDPE casing across the limits of the RUA. Replacement limits of the piping shall be to the nearest intersecting main outside the RUA.

All pressure sewer mains crossing the light rail project shall have corrosion protection in accordance with the requirements of the Cathodic Protection System Requirements found in Appendix E. No corrosion protection is required for gravity sewers.

Subject to written consent of the WSD, and on a case-by-case basis, existing perpendicular crossings of sanitary sewer pipelines under the light rail track and within the RUA which cannot be lowered may be left within the RUA if the following criteria are met:

1. Sewer pipeline depth is more than 3 feet from the top of pipe to the top of light rails.

2. Sewer pipeline is replaced with new piping to the limits specified above, and is encased in steel or HDPE casing.

Limits of casings under the track bed shall extend across limits of the RUA. The casing shall have the following characteristics:

1. Casing Materials: ASTM A36 Steel with Coating or HDPE smooth interior corrugated pipe casing, ADS Systems N12 or equal. Casing wall thickness shall be sufficient for dead and live load requirements with a minimum 2.0 safety factor. Steel casing shall have a factory applied tape wrap corrosion protection coating

2. Casing Size: casing diameter shall be as follows:

   - Casing for Mains: casing inside diameter shall be equal to or greater than the carrier pipe bell or coupling outside diameter plus a minimum of 6 inches.

   - Sewer Services: sewer services require casings 6 inches larger than the bell O.D. or fitting as described above.

3. Casing/Carrier Pipe Spacers and Insulators: the carrier pipe shall be installed with casing insulators banded to it for support and isolation. Refer to APPENDIX C to this addendum (Detail LRT 9).

4. Annular Space: the annular space shall be filled with blown sand. See Detail LRT 9 in Appendix C.

5. Casing End Seals: All casing shall be installed with pre-manufactured casing/carrier end seals intended for such use. Refer to APPENDIX C to this addendum (Detail LRT 9). No venting of the casings is required for water and sewer utility crossings.

**37. INSERT NEW section:**

Chapter 5, Section 5.2.7 CCTV Inspection Procedures

5. A request for closed circuit television (CCTV) inspection shall be submitted to METRO using the City of Phoenix TV Inspection Request Form, a copy of the line section drawing with clouding around the area to be inspected, and a quarter section sketch. Submit request two weeks prior to the inspection date.

6. METRO shall forward the request to the consultant, preferably using the Document Submittal process for ease of tracking.

7. Consultant shall submit the CCTV request to WSD, Wastewater Collection Division, CCTV section, for review and implementation.

8. CCTV section shall schedule a supervisor to inspect the site prior to inspection. The supervisor will set the date and time for the CCTV crew to perform the inspection directly with the contractor.

9. The contractor shall provide traffic control, clean the sewer main prior to inspection, and provide sewer plugs as requested by CCTV section personnel.

10. CCTV crew shall perform the inspection as scheduled.

11. CCTV crew shall prepare a written report and a DVD, which will be delivered to the consultant. The consultant will forward the written report, DVD and instructions for corrections, if applicable, to METRO, preferably through the Document Submittal process.

12. METRO shall be responsible for reviewing the written report and DVD and then delivering a copy to the contractor with any necessary instructions for correction and the rescheduling of a follow-up CCTV inspection, if applicable.

13. A follow-up inspection will require the contractor to submit a request with all appropriate documentation as outlined in the first step above (full package is required).

14. All additional inspections required due to failure of the initial inspection will be paid for by the contractor.

***NOTE:*** *See APPENDIX F for the TV Inspection Request form.*

**38. Chapter 5, Section 5.4.8 Sewer Main Connections at Manholes, ADD:**

All gravity sewer lines crossing the track shall be Protecto 401 epoxy coated DIP, installed in a casing. Manholes shall be located on each side of the track at the pipe material transition locations.

Transition of pipe materials from ductile iron to VCP or concrete shall only be achieved inside of a manhole.

**39. INSERT NEW subsection:**

Chapter 5, Section 5.7.1 Thrust Restraint

All pressure sewer pipelines shall be designed, installed and have adequate thrust restraint systems. All existing pressure pipe thrust restraint systems shall be protected, restored or replaced as required. Where existing thrust block bearing soils are disturbed, new thrust restraint systems shall be designed and installed as specified. Friction-type joints such as Mega-lugs shall not be considered positive restraint systems. Mega-lugs and thrust tie rods may be installed as required for contractor's means or methods, but permanent installations shall have positive restrained joints, thrust blocks or other another approved positive restraint system.

All pressure sewer pipelines shall be designed with adequate thrust restraint systems. All existing pressure pipe thrust restraint systems shall be protected, restored or replaced as required. Where existing thrust block bearing soils are disturbed, new thrust restraint systems shall be designed and installed. Allowable systems are positive restraint joints and friction type joints (e.g., Mega-lugs). The use of thrust blocks are allowed only where new, restrained pipelines connect to non-restrained systems.

**40. INSERT NEW section:**

Chapter 5, Section 5.9 Sewer Abandonment

**41. INSERT NEW subsection:**

Chapter 5, Section 5.9.1 Service Connection Abandonment

All existing sewer service lines to be abandoned shall be removed from the property line or easement line back to the main. As part of abandonment, the service connection upstream of the last horizontal joint shall be saw cut. Once cut, a stainless steel no hub coupling and a cast iron plug shall be installed to seal the remaining section of the sewer service connection. Abandonment in place will be approved by WSD on a case-by-case basis.

**42. INSERT NEW subsection:**

Chapter 5, Section 5.9.2 Sewer Abandonment

It is the intent of the Water Services Department that all sewer mains be completely removed from the right-of-way at the time of abandonment. There may be instances where WSD allows abandoned sewer mains to remain in place. In those cases the following applies:

All abandoned sewer mains left in place shall be filled with CLSM. Sewage from abandoned sewers shall be pumped into the downstream sewer manhole, or into a vactor truck and disposed of as approved by the City of Phoenix. Sewer mains shall be thoroughly flushed (by jetting or other means) and vacuumed prior to being filled with CLSM. The contactor shall completely fill the abandoned sections with CLSM. CLSM may be pumped or gravity fed into one end of the abandoned pipe section. Voids in the CLSM will not be permitted. CLSM shall meet the slump and strength requirements for “1 sack CLSM” as specified in MAG Specification 728.

Temporary vent pipes shall be installed prior to filling the abandoned sections with CLSM. These vent pipes will remain intact until the abandoned sections have been completely filled with CLSM and the work has been inspected. After approval from the engineer or construction manager, the vent shall be removed and the holes backfilled.

The abandoned sewer pipelines shall be plugged at the locations shown on the construction plans per MAG Detail 427. The concrete used for the plugs shall be as specified in MAG Specification 725, Class C.

Abandoned sanitary sewer manholes shall be completely removed, including the concrete base.

**43. INSERT NEW section:**

Chapter 5, Section 5.10 Bypass Pumping

**44. INSERT NEW subsection:**

Chapter 5, Section 5.10.1 Bypass Pumping Requirements

Whenever it becomes necessary to construct temporary bypass of sewer lines around a construction area, the contractor, consultant or private developer shall provide all labor, materials and supervision to temporarily bypass flow around the contractor's, consultant's or private developer's work. The actual design of the bypass arrangement shall be prepared by the contractor, consultant or private developer and shall be submitted for approval to WSD and its designated representative as part of the Detailed Construction Shutdown Plan, Form SD-7, in Appendix D.

It is the contractor's, consultant's or private developer's responsibility to arrange the necessary access and temporary construction agreements with all affected parties for the location of the bypass pumping system. It is also the contractor's, consultant's or private developer's responsibility to prepare and conduct the sewer bypass to allow safe traffic flow and comply with a traffic control plan approved by STD.

The bypass pumping system shall be designed to keep the flow in the sewer system from surging (at or below the crown of the pipe). The contractor, consultant or private developer shall perform sewer flow measurements to determine the peak flow rate or use the full flow capacity of the pipe, whichever is greater. The use of the pipe's full flow capacity in designing the bypass pumping system shall not relieve the contractor from their responsibility to provide an adequate and properly functioning bypass system. Any additional monitoring or flow data gathering shall be the responsibility of the contractor. The City of Phoenix is not responsible for any deviations in quantity of sewage flow at any time during the construction period. Higher flows may be encountered, depending on weather and other upstream conditions.

The bypass pumping system shall incorporate odor control measures as specified in other specification sections. See APPENDIX G to this addendum.

The contractor, consultant or private developer shall provide noise reduction measures necessary to prevent noise complaints by residents and businesses and otherwise comply with City of Phoenix noise ordinances and requirements.

The contractor, consultant or private developer shall test the entire bypass pumping system in place before bypassing any sewage. Bypass pumping shall be continuously monitored by personnel qualified to operate the pumping equipment.

The contractor, consultant or private developer shall adhere to the Spill Prevention and Control requirements. See APPENDIX G to this addendum.

The contractor, consultant or private developer shall include the following in his bypass pumping plan as part of the Detailed Construction Shutdown Plan:

a. drawings indicating the scheme and location of the temporary sewer plugs and bypass discharge lines

b. capacities of pumps, prime movers and standby equipment that provide 100 percent redundancy

c. design calculations providing adequacy of the system and selected equipment

d. standby power source

e. staffing plan

f. security plan

g. approved traffic control plan

**45. INSERT NEW section:**

Chapter 5, Section 5.11 Sewer Line Odor Control

A high priority is placed on minimizing the public's exposure to foul odors while work is being carried out in the wastewater collection system. The design and construction of gravity sanitary sewers in the City of Phoenix shall conform to the following:

a. An odor control program for sewer relocation, rehabilitation, bypass pumping and other activities related to wastewater collection sewers shall be implemented.

b. Successful odor control mitigation shall be based on receiving no public odor complaints.

c. Prior to the beginning of work, the section of sewer main affected by construction shall be cleaned by jetting or other means to remove any deposited solids and reduce the potential for odor complaints. The length of the sewer to be cleaned shall be determined by the City, or its representative, but shall measure, at a minimum, the entire pipeline length between existing manholes.

d. The appropriate odor control mitigation practices shall be chosen to meet the odor control criteria listed in Item b above. Possible odor mitigation practices include:

   - addition of ferrous or ferric chloride and/or hydrogen peroxide into the wastewater

   - addition of sodium hypochlorite (12 percent bleach) into the wastewater

   - covering, containing and treating foul air using activated charcoal canisters

e. The following actions shall be followed when performing odor mitigation procedures:

   1. If chemical injection is used, a minimum of 24 hours advance notification to the 23rd Avenue Wastewater Treatment Plant shall be provided.

   2. If ferric chloride is used, 24 hours per day/seven days per week containment must be secured.

f. The contractor shall be responsible for preventing any public complaints regarding foul odor and maintaining the level of H2S concentration in the affected construction area at or below the odor nuisance limit at all times.

g. Immediate action shall be taken to remedy public complaints regarding foul air emanating from the sewer construction. A fine of $1,000 for each day odor complaints are received after the first notification for a particular construction site or location shall be levied.

h. All necessary precautions shall be taken, including personnel training in the proper handling, storage and use of the chemicals for odor control. Required materials safety data sheets, personal protective equipment, spill prevention controls and warning signs for each chemical used for odor control shall be maintained.

***Note:*** *See APPENDIX H to this addendum for the odor control form.*

# *APPENDIX A ABBREVIATIONS*

| | |
|---|---|
| ADHS | Arizona Department of Health Services |
| CCTV | closed circuit television |
| CDRL | Contract Deliverable Requirements List |
| $H_2S$ | hydrogen sulfide |
| HMW | high molecular weight |
| ICEA | Insulated Cable Engineers Association |
| MIL | military specifications |
| NACE | National Association of Corrosion Engineers |
| RUA | restricted utility area |

# *APPENDIX B FIRE HYDRANT INSTALLATIONS*

The four connections shown on **Figure B.1** can be used for connecting to fire hydrants adjacent to conflicting utilities. Such connections presume the following facts:

1. All connections are mechanically restrained.

2. A minimum of 12 inches of clearance will be maintained between the conflicting utility and the waterline serving the fire hydrant.

3. Standard hydrant barrel lengths of 3.5 feet will be used. Shorter barrel lengths may be allowed, but none will be permitted longer than the standard barrel length.

The preferred precedence among connections is as follows:

1. When possible, use Gradelok connections as shown in the fourth detail.

2. If more than 18 inches of rise is required and adequate room is available between the conflicting utility and the hydrant, use 45-degree bends to accomplish the rise as shown in the first detail.

3. In cases where there is more than 18 inches required and adequate room is not available to use 45-degree bends, use 90-degree bends as shown in the second detail.

4. In cases where there is more than 18 inches of rise required and adequate room is unavailable to use 90-degree bends as shown in the second detail, the use of 90-degree bends in a swing joint configuration may be used as shown in the third detail.

Whenever possible, ensure that no joints fall directly below other utilities.

CLSM backfill will be used between conflicting utility and waterline to ensure no voids are present.

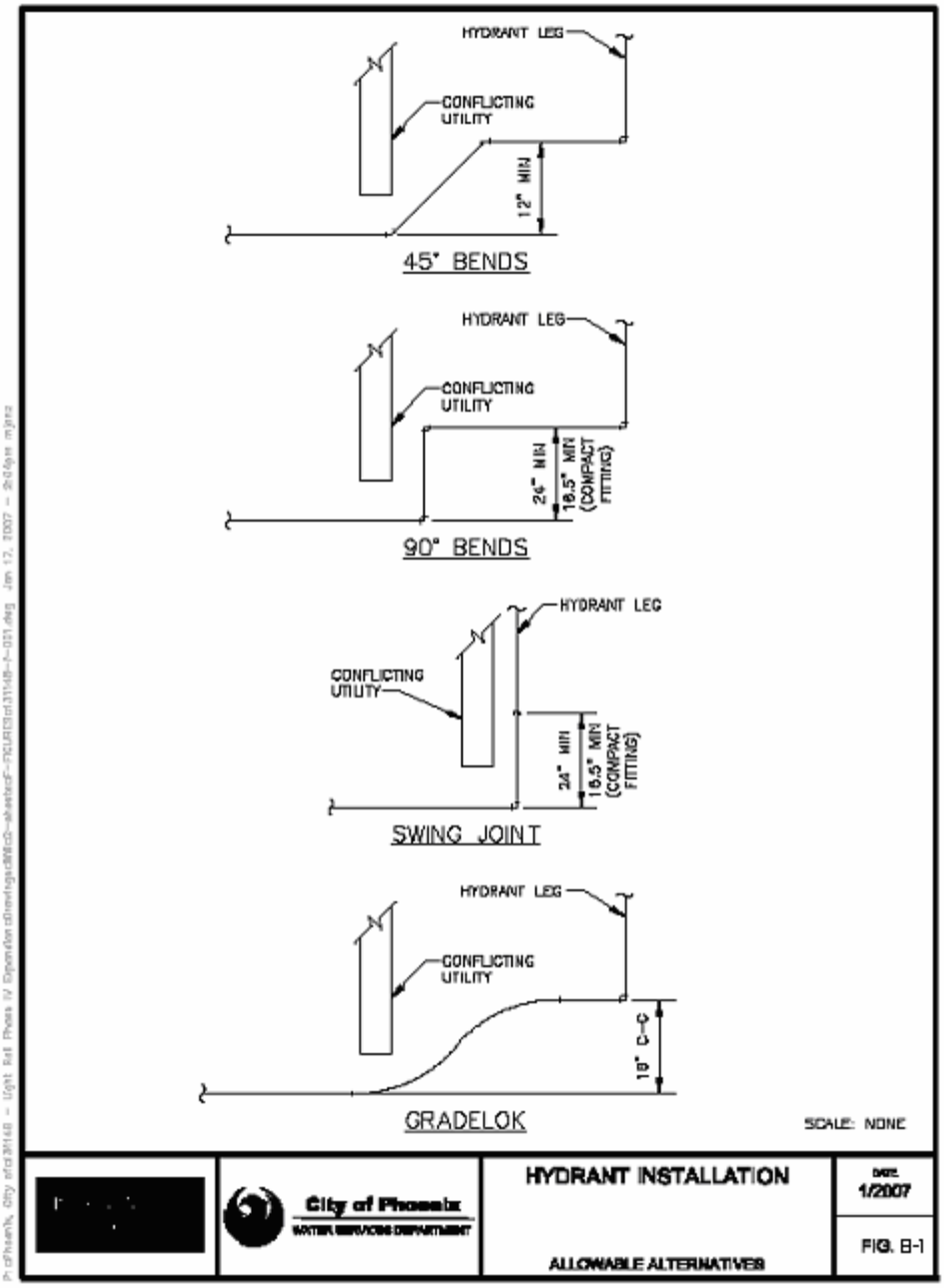
HYDRANT LEG
CONFLICTING UTILITY
12" MIN
45° BENDS
HYDRANT LEG
CONFLICTING UTILITY
24" MIN
18.5" MIN (COMPACT FITTING)
90° BENDS
HYDRANT LEG
CONFLICTING UTILITY
24" MIN
18.5" MIN (COMPACT FITTING)
SWING JOINT
HYDRANT LEG
CONFLICTING UTILITY
18" C-C
GRADELOK
SCALE: NONE
City of Phoenix
WATER SERVICES DEPARTMENT
HYDRANT INSTALLATION
ALLOWABLE ALTERNATIVES
DATE 1/2007
FIG. B-1

# *APPENDIX C PARALLEL RELOCATIONS*

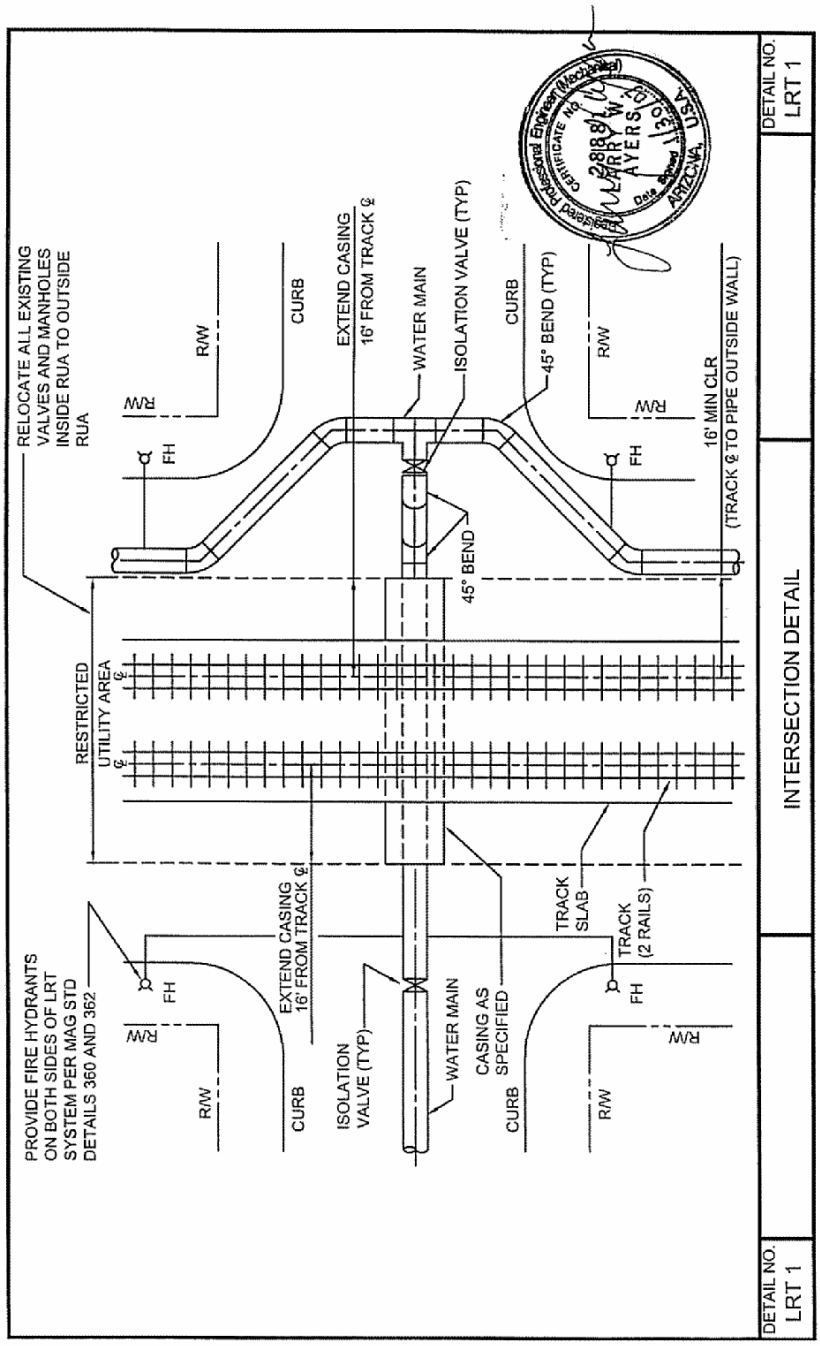
RELOCATE ALL EXISTING VALVES AND MANHOLES INSIDE RUA TO OUTSIDE RUA
R/W
CURB
EXTEND CASING 16' FROM TRACK ℄
WATER MAIN
ISOLATION VALVE (TYP)
CURB
45° BEND (TYP)
R/W
16' MIN CLR (TRACK ℄ TO PIPE OUTSIDE WALL)
FH
45° BEND
RESTRICTED UTILITY AREA
PROVIDE FIRE HYDRANTS ON BOTH SIDES OF LRT SYSTEM PER MAG STD DETAILS 360 AND 362
EXTEND CASING 16' FROM TRACK ℄
ISOLATION VALVE (TYP)
WATER MAIN
CASING AS SPECIFIED
TRACK SLAB
TRACK (2 RAILS)
DETAIL NO. LRT 1
INTERSECTION DETAIL
DETAIL NO. LRT 1

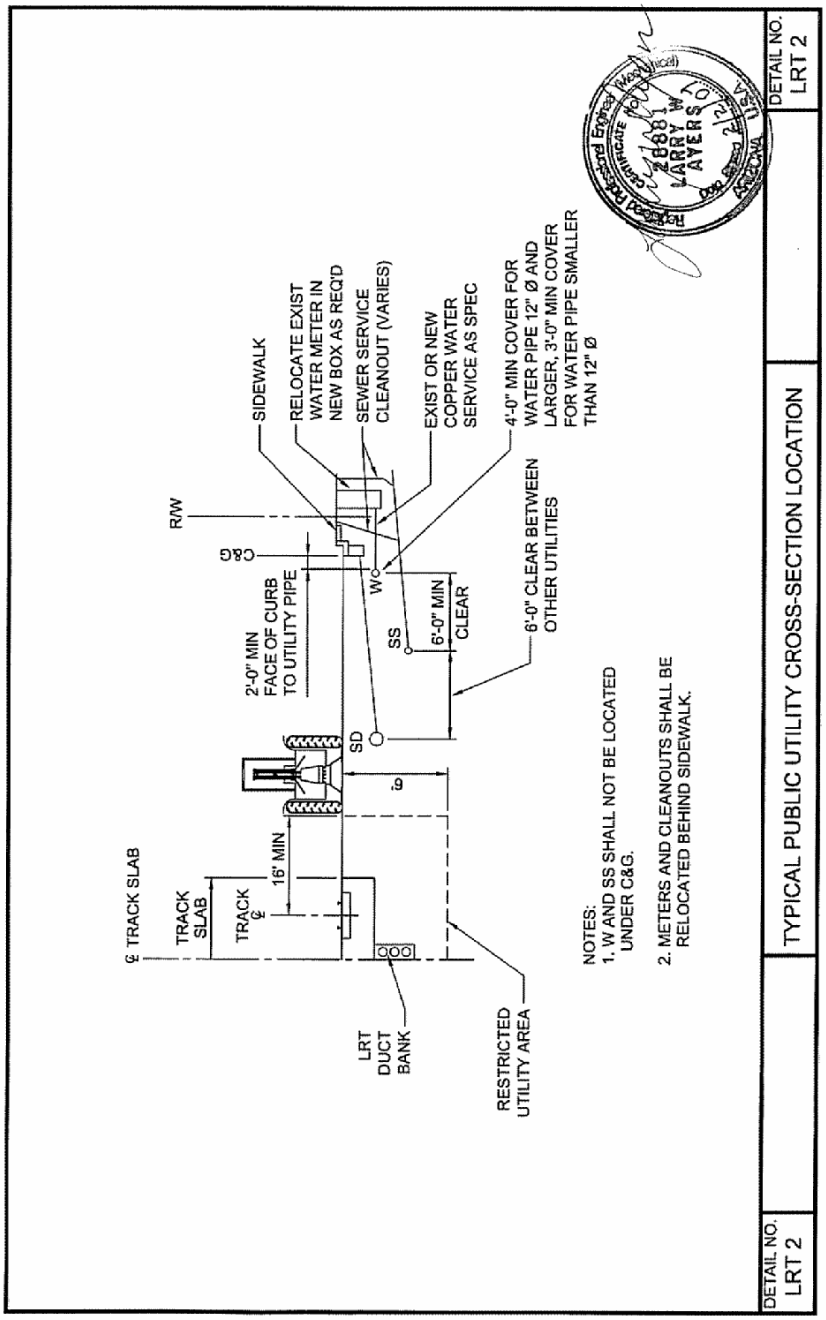
℄ TRACK SLAB
TRACK SLAB
TRACK ℄
15' MIN
6'
SD
2'-0" MIN FACE OF CURB TO UTILITY PIPE
C&G
R/W
SIDEWALK
RELOCATE EXIST WATER METER IN NEW BOX AS REQ'D
SEWER SERVICE CLEANOUT (VARIES)
EXIST OR NEW COPPER WATER SERVICE AS SPEC
4'-0" MIN COVER FOR WATER PIPE 12" Ø AND LARGER, 3'-0" MIN COVER FOR WATER PIPE SMALLER THAN 12" Ø
W
SS
6'-0" MIN CLEAR
6'-0" CLEAR BETWEEN OTHER UTILITIES
LRT DUCT BANK
RESTRICTED UTILITY AREA
NOTES:
1. W AND SS SHALL NOT BE LOCATED UNDER C&G.
2. METERS AND CLEANOUTS SHALL BE RELOCATED BEHIND SIDEWALK.
DETAIL NO. LRT 2
TYPICAL PUBLIC UTILITY CROSS-SECTION LOCATION
DETAIL NO. LRT 2

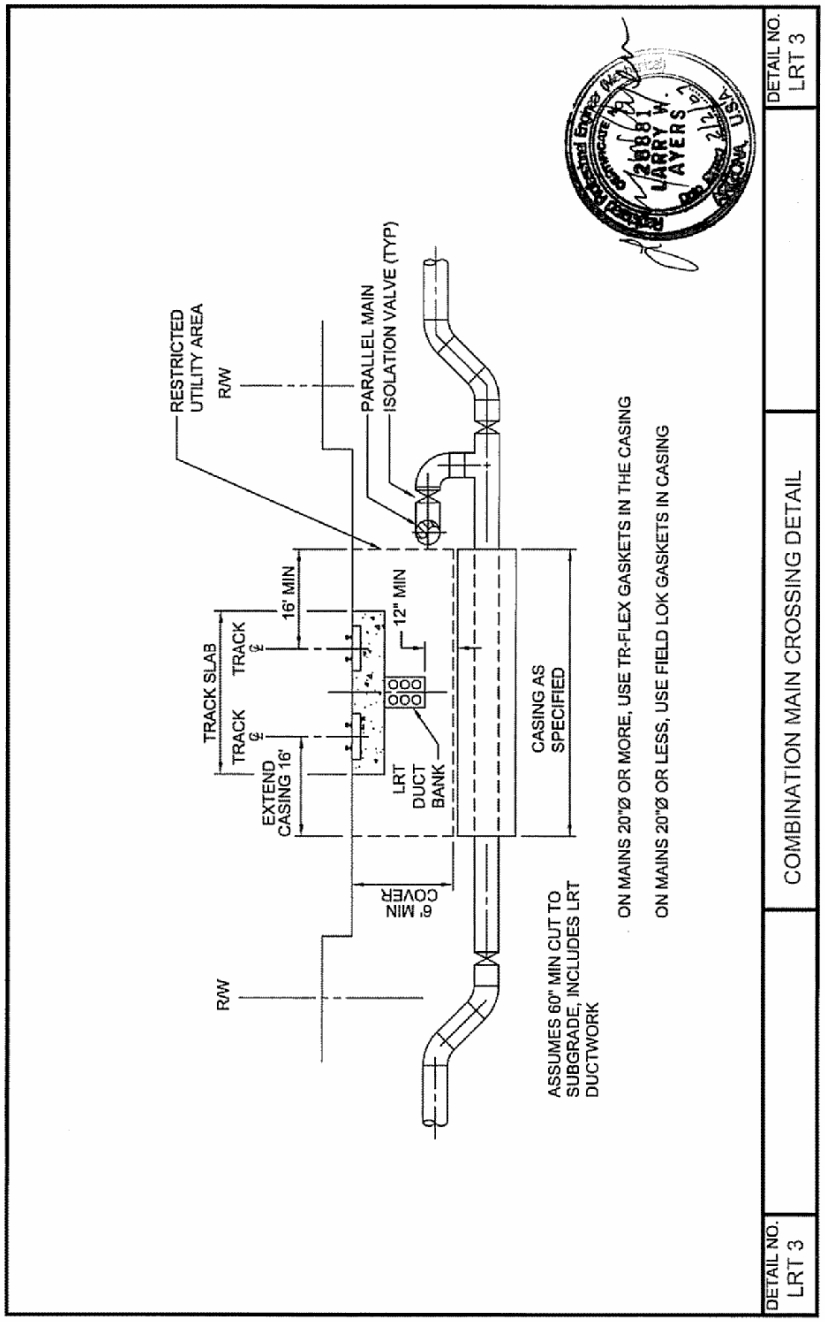
RESTRICTED UTILITY AREA
R/W
PARALLEL MAIN ISOLATION VALVE (TYP)
TRACK SLAB
TRACK ℄
TRACK ℄
16' MIN
12" MIN
EXTEND CASING 16'
LRT DUCT BANK
CASING AS SPECIFIED
6' MIN COVER
R/W
ASSUMES 60" MIN CUT TO SUBGRADE, INCLUDES LRT DUCTWORK
ON MAINS 20"Ø OR MORE, USE TR-FLEX GASKETS IN THE CASING
ON MAINS 20"Ø OR LESS, USE FIELD LOK GASKETS IN CASING
DETAIL NO. LRT 3
COMBINATION MAIN CROSSING DETAIL
DETAIL NO. LRT 3

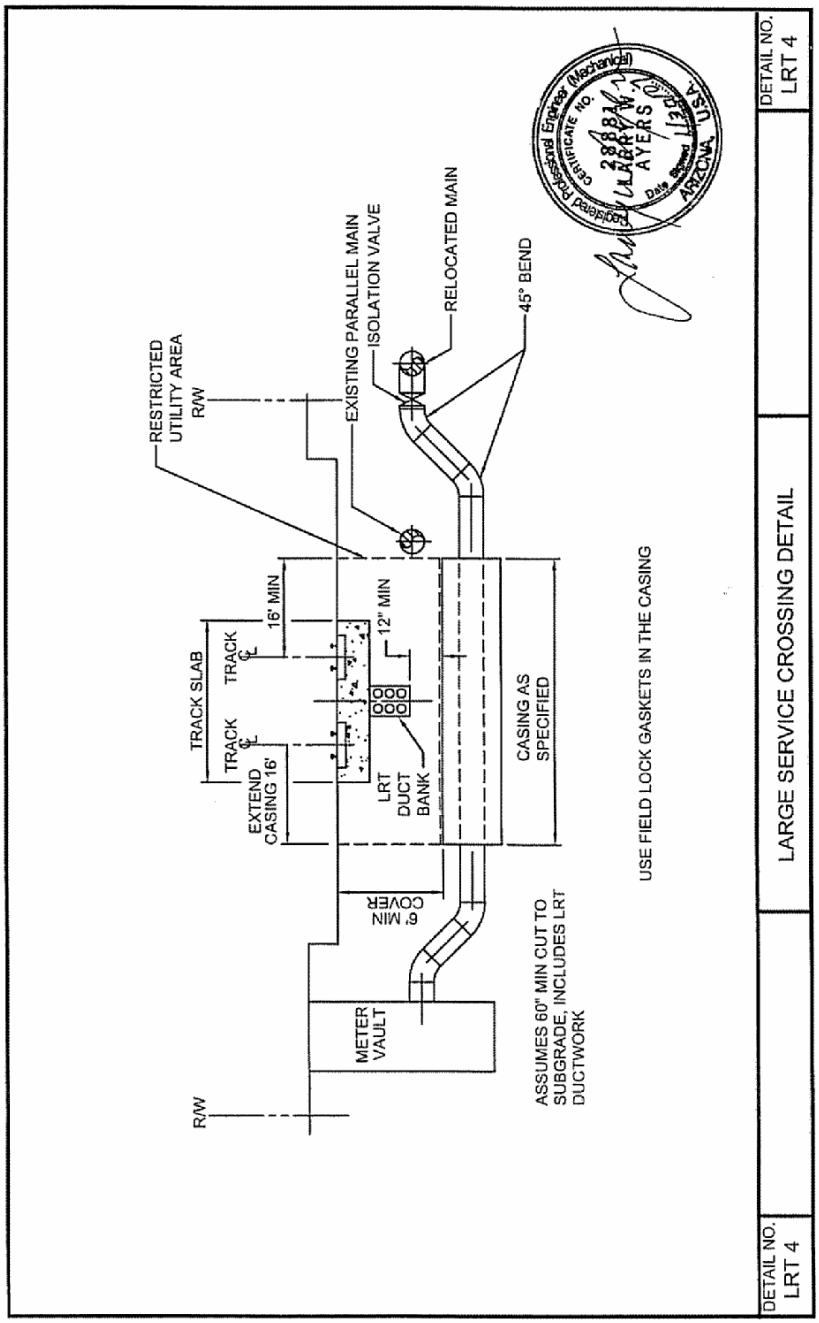
RESTRICTED UTILITY AREA R/W
EXISTING PARALLEL MAIN
ISOLATION VALVE
RELOCATED MAIN
45° BEND
TRACK SLAB
TRACK ℄
TRACK ℄
16' MIN
12" MIN
EXTEND CASING 16'
LRT DUCT BANK
CASING AS SPECIFIED
6' MIN COVER
METER VAULT
R/W
ASSUMES 60" MIN CUT TO SUBGRADE, INCLUDES LRT DUCTWORK
USE FIELD LOCK GASKETS IN THE CASING
LARGE SERVICE CROSSING DETAIL
DETAIL NO. LRT 4
DETAIL NO. LRT 4

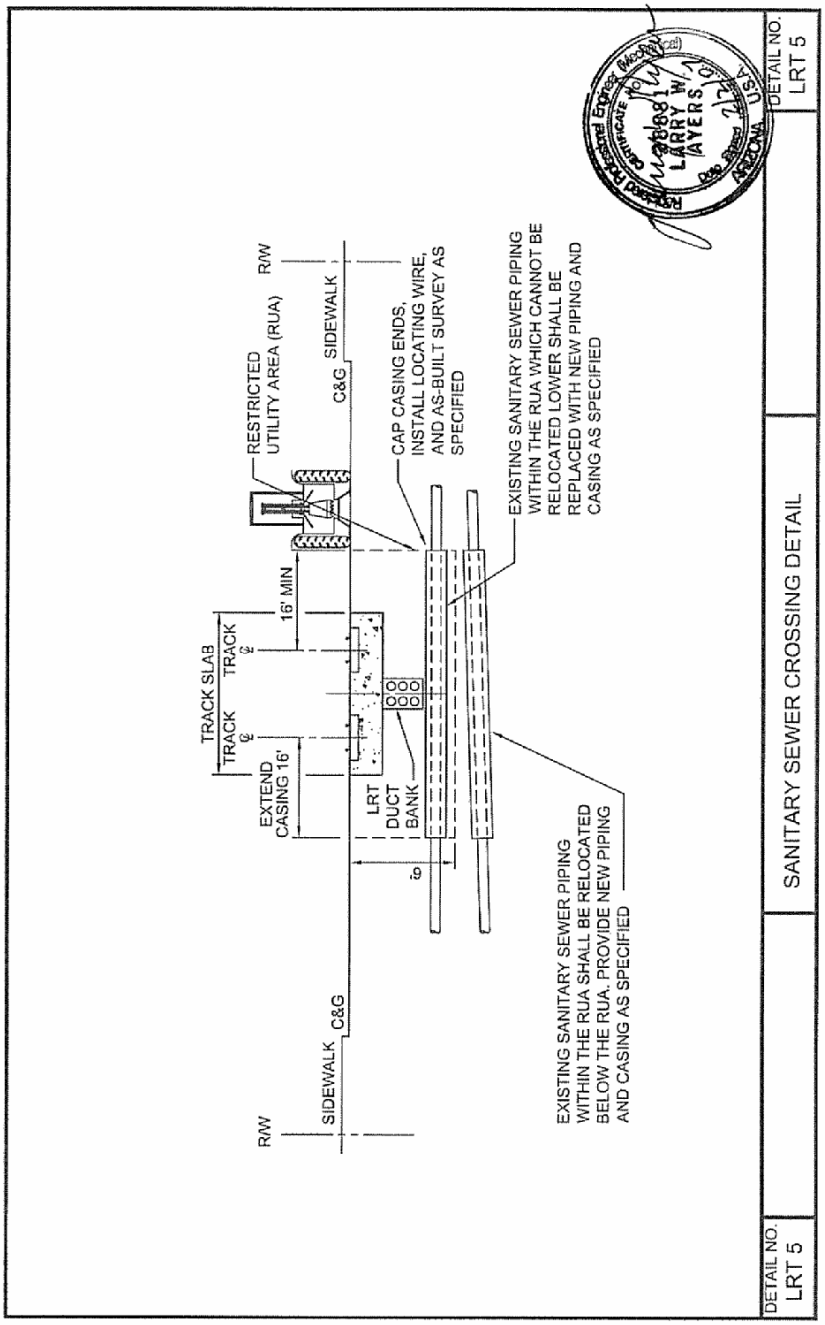
R/W
SIDEWALK
C&G
RESTRICTED UTILITY AREA (RUA)
TRACK SLAB
TRACK
TRACK
16' MIN
EXTEND CASING 16'
LRT DUCT BANK
CAP CASING ENDS, INSTALL LOCATING WIRE, AND AS-BUILT SURVEY AS SPECIFIED
EXISTING SANITARY SEWER PIPING WITHIN THE RUA WHICH CANNOT BE RELOCATED LOWER SHALL BE REPLACED WITH NEW PIPING AND CASING AS SPECIFIED
EXISTING SANITARY SEWER PIPING WITHIN THE RUA SHALL BE RELOCATED BELOW THE RUA. PROVIDE NEW PIPING AND CASING AS SPECIFIED
DETAIL NO.
LRT 5
SANITARY SEWER CROSSING DETAIL
DETAIL NO.
LRT 5

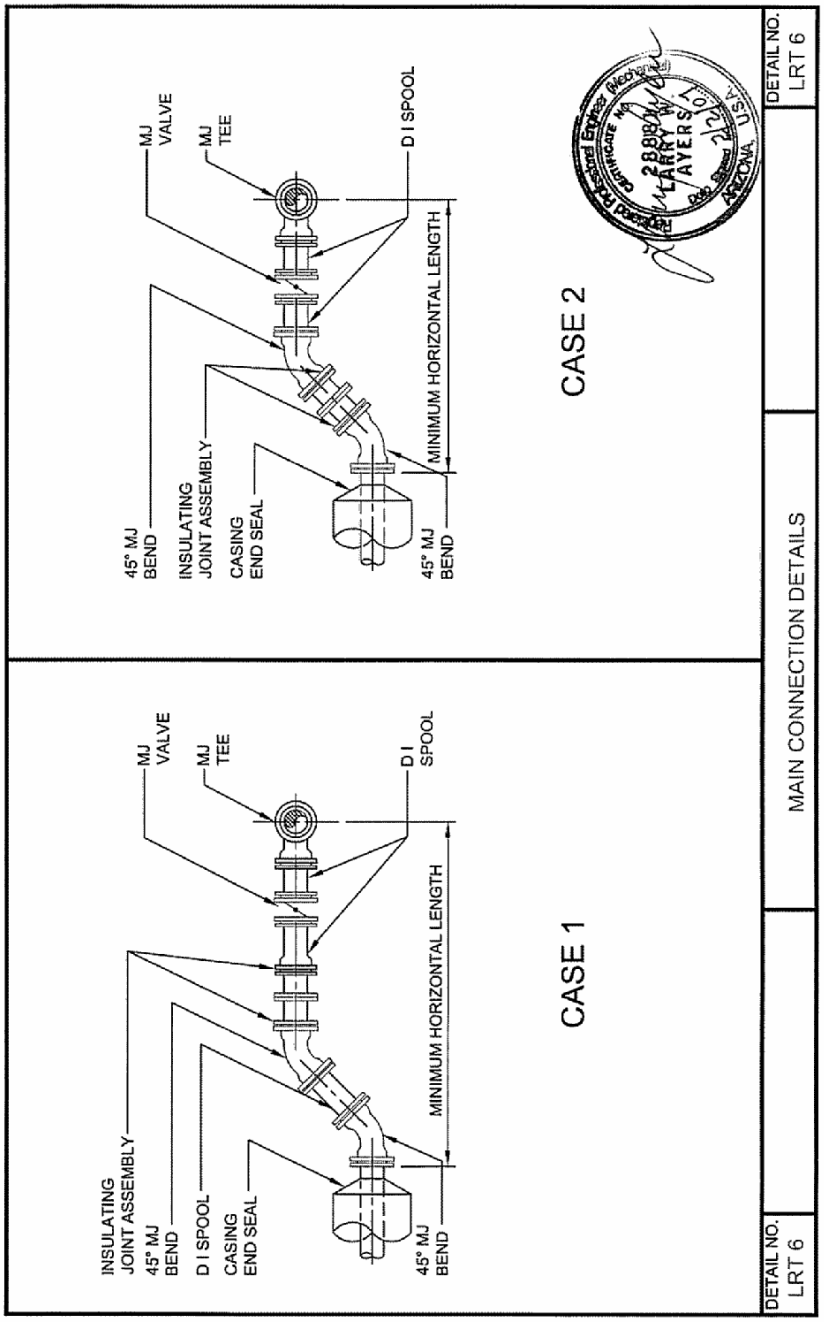
MJ VALVE
MJ TEE
D I SPOOL
45° MJ BEND
INSULATING JOINT ASSEMBLY
CASING END SEAL
MINIMUM HORIZONTAL LENGTH
45° MJ BEND
CASE 2
MJ VALVE
MJ TEE
D I SPOOL
INSULATING JOINT ASSEMBLY
45° MJ BEND
D I SPOOL
CASING END SEAL
MINIMUM HORIZONTAL LENGTH
45° MJ BEND
CASE 1
DETAIL NO. LRT 6
MAIN CONNECTION DETAILS
DETAIL NO. LRT 6

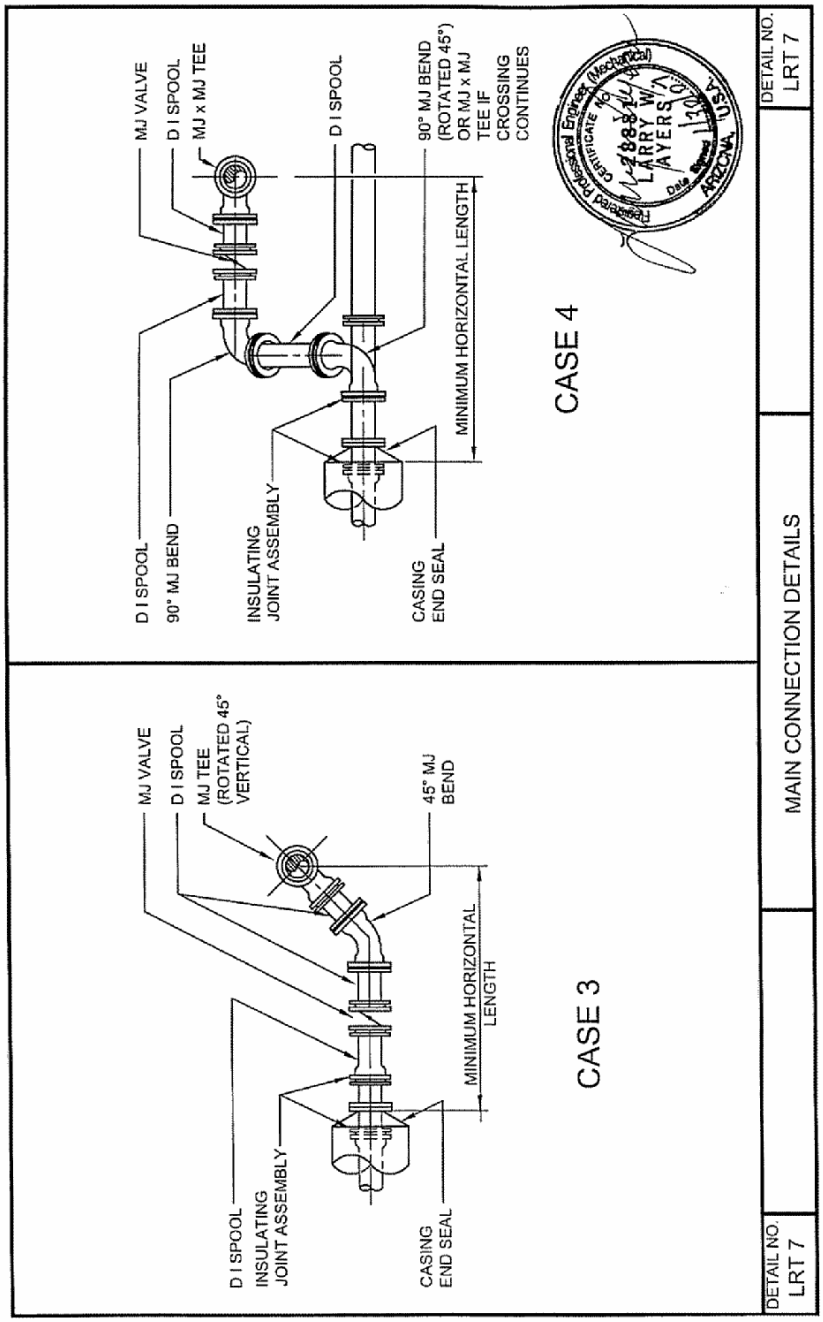
MJ VALVE
D I SPOOL
MJ x MJ TEE
D I SPOOL
90° MJ BEND
(ROTATED 45°)
OR MJ x MJ
TEE IF
CROSSING
CONTINUES
D I SPOOL
90° MJ BEND
INSULATING
JOINT ASSEMBLY
CASING
END SEAL
MINIMUM HORIZONTAL LENGTH
CASE 4
DETAIL NO.
LRT 7
MJ VALVE
D I SPOOL
MJ TEE
(ROTATED 45°
VERTICAL)
45° MJ
BEND
D I SPOOL
INSULATING
JOINT ASSEMBLY
CASING
END SEAL
MINIMUM HORIZONTAL
LENGTH
CASE 3
MAIN CONNECTION DETAILS
DETAIL NO.
LRT 7

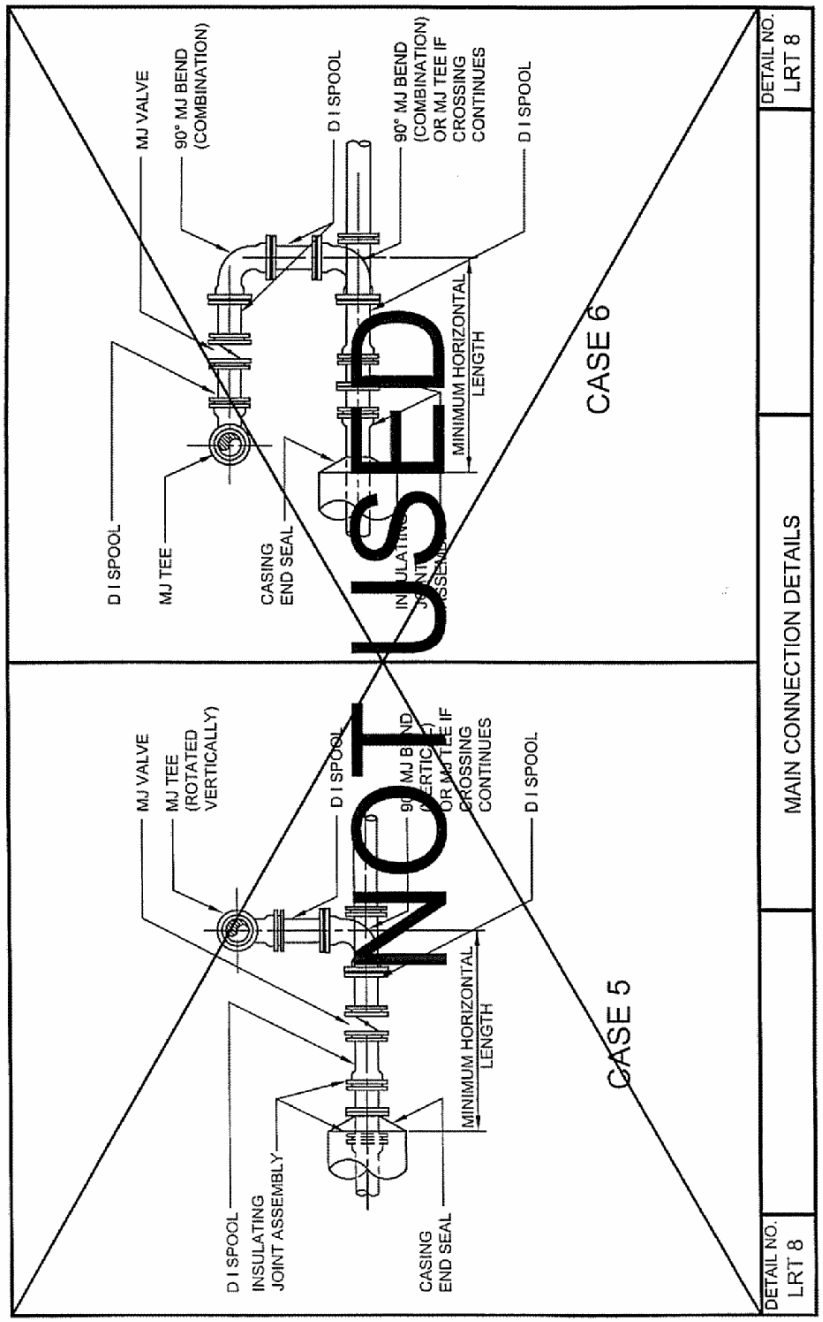
D I SPOOL
MJ TEE
MJ VALVE
90° MJ BEND (COMBINATION)
CASING END SEAL
D I SPOOL
90° MJ BEND (COMBINATION) OR MJ TEE IF CROSSING CONTINUES
D I SPOOL
MINIMUM HORIZONTAL LENGTH
CASE 6
NOT USED
D I SPOOL
INSULATING JOINT ASSEMBLY
MJ VALVE
MJ TEE (ROTATED VERTICALLY)
D I SPOOL
CASING END SEAL
D I SPOOL
MINIMUM HORIZONTAL LENGTH
CASE 5
DETAIL NO. LRT 8
MAIN CONNECTION DETAILS
DETAIL NO. LRT 8

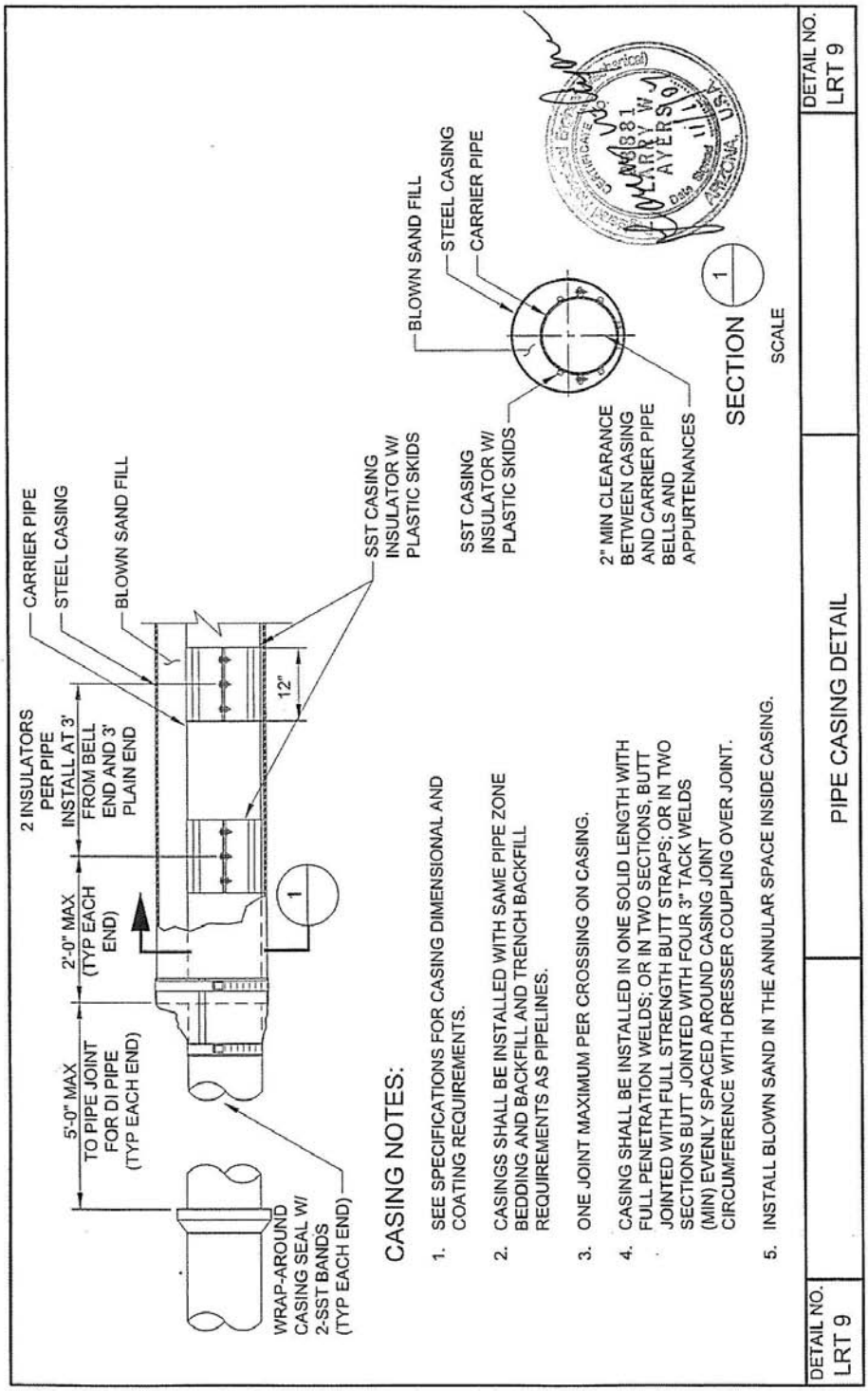
CARRIER PIPE
STEEL CASING
BLOWN SAND FILL
2 INSULATORS PER PIPE INSTALL AT 3' FROM BELL END AND 3' PLAIN END
2'-0" MAX (TYP EACH END)
5'-0" MAX TO PIPE JOINT FOR DI PIPE (TYP EACH END)
12"
1
WRAP-AROUND CASING SEAL W/ 2-SST BANDS (TYP EACH END)
SST CASING INSULATOR W/ PLASTIC SKIDS
BLOWN SAND FILL
STEEL CASING
CARRIER PIPE
SST CASING INSULATOR W/ PLASTIC SKIDS
2" MIN CLEARANCE BETWEEN CASING AND CARRIER PIPE BELLS AND APPURTENANCES
SECTION 1
SCALE
CASING NOTES:
1. SEE SPECIFICATIONS FOR CASING DIMENSIONAL AND COATING REQUIREMENTS.
2. CASINGS SHALL BE INSTALLED WITH SAME PIPE ZONE BEDDING AND BACKFILL AND TRENCH BACKFILL REQUIREMENTS AS PIPELINES.
3. ONE JOINT MAXIMUM PER CROSSING ON CASING.
4. CASING SHALL BE INSTALLED IN ONE SOLID LENGTH WITH FULL PENETRATION WELDS; OR IN TWO SECTIONS, BUTT JOINTED WITH FULL STRENGTH BUTT STRAPS; OR IN TWO SECTIONS BUTT JOINTED WITH FOUR 3" TACK WELDS (MIN) EVENLY SPACED AROUND CASING JOINT CIRCUMFERENCE WITH DRESSER COUPLING OVER JOINT.
5. INSTALL BLOWN SAND IN THE ANNULAR SPACE INSIDE CASING.
PIPE CASING DETAIL
DETAIL NO. LRT 9
DETAIL NO. LRT 9

# *APPENDIX D SHUTDOWN PLANS*

FORM SD-1: DETAILED CONSTRUCTION SHUTDOWN PLAN

**UTILITY INFORMATION**

LINE SEGMENT: _____
SHUTDOWN PLAN NUMBER: _____
UTILITY TYPE: _____
UTILITY SIZE: _____
UTILITY MATERIAL: _____
START STATION/OFFSET: _____
END STATION/OFFSET: _____
START CROSS STREET: _____
END CROSS STREET: _____
CONTRACT DRAWING: _____

**CONTRACTOR INFORMATION**

CONTRACTOR'S NAME: _____
CONTACT NAME: _____
24 HR HOTLINE PHONE: _____
BUSINESS PHONE: _____
FAX: _____
PREPARED BY: _____
SIGNATURE: _____
DATE: _____

DESCRIPTION OF WORK:

Describe the work involved for this utility segment including construction means and methods, method of disinfection, flushing, bacteria testing, special requirements and equipment needed.

PLANNED SHUTDOWN DURATION:
_____

FORM SD-2: DETAILED CONSTRUCTION SHUTDOWN PLAN (Cont'd.)

WORK SCHEDULE

LINE SECTION: _____ SHUTDOWN PLAN NO. _____

| |
|---|
| List task descriptions with estimated work duration.<br>Include measures and tasks for response if work exceeds estimated duration. |

FORM SD-3: DETAILED CONSTRUCTION SHUTDOWN PLAN (Cont'd.)

MATERIAL AND EQUIPMENT INVENTORY
(Required to be completed and checked 24 hours prior to commencement of work)

LINE SECTION: _____ SHUTDOWN PLAN NO. _____

| Material/Equipment | Number | Spare |
|---|---|---|
| | | |
| | | |
| | | |
| | | |
| | | |
| | | |
| | | |
| | | |
| | | |
| | | |
| | | |
| | | |
| | | |
| | | |
| | | |
| | | |
| | | |
| | | |
| | | |
| | | |
| | | |
| | | |
| | | |
| | | |
| | | |
| | | |
| | | |
| | | |
| | | |
| | | |
| | | |
| | | |
| | | |

FORM SD-4: DETAILED CONSTRUCTION SHUTDOWN PLAN (Cont'd.)

LIST OF AFFECTED CUSTOMERS

LINE SECTION: _____
SHUTDOWN PLAN NO. _____

| Name | Street Address | Phone Number | Special Utility Restriction | Type of Customer | Notification Confirmed (Y/N) |
|---|---|---|---|---|---|
| | | | | | |
| | | | | | |
| | | | | | |
| | | | | | |
| | | | | | |
| | | | | | |
| | | | | | |
| | | | | | |
| | | | | | |
| | | | | | |
| | | | | | |
| | | | | | |
| | | | | | |
| | | | | | |
| | | | | | |
| | | | | | |
| | | | | | |
| | | | | | |
| | | | | | |
| | | | | | |
| | | | | | |
| | | | | | |
| | | | | | |

FORM SD-5: DETAILED CONSTRUCTION SHUTDOWN PLAN (Cont'd.)

TEMPORARY PIPING PROVISIONS TO MAINTAIN CUSTOMER SERVICE

LINE SECTION: _____ SHUTDOWN PLAN NO. _____

Describe contractor's means and methods to maintain customer service during construction. Include construction plans and sketches as appropriate.

FORM SD-6: DETAILED CONSTRUCTION SHUTDOWN PLAN (Cont'd.)

NUISANCE WATER MITIGATION PLAN

LINE SECTION: _____ SHUTDOWN PLAN NO. _____

Describe contractor's means and methods for dealing with nuisance water as a result of valves not sealing completely.

FORM SD-7: DETAILED CONSTRUCTION SHUTDOWN PLAN (Cont'd.)

SEWER BYPASS PUMPING PLAN

LINE SECTION: _____ SHUTDOWN PLAN NO. _____

DESCRIPTION:

_____
_____
_____
_____
_____
_____
_____
_____

BASIS OF PUMP SELECTION:

_____
_____
_____
_____
_____
_____
_____
_____

REDUNDANCY – SPECIFY IN DETAIL

_____
_____
_____
_____
_____
_____
_____
_____

PUMPS: _____
PIPE: _____
POWER: _____

FORM SD-8

# Company Name

NOTICE OF INTERRUPTION OF WATER SERVICE

*Company Name* is working with METRO on the construction of the Light Rail Transit system. Relocation of existing water and sewer utilities and the installation of new utilities will require a temporary shutdown of your water service. Your water service will be interrupted on _____between _____ AM / PM and _____ AM/PM to enable our construction crews to perform the construction work.

The work involves _____describe the work_____
_____
_____
_____
_____
_____
_____
_____

If an emergency should arise, or the weather should prevent the necessary work to be performed on the stated date, the interruption will be rescheduled for the next business day at the stated time.

It is suggested that you reserve enough water for your personal use during the interruption.

If you have any questions regarding the interruption of service, please call our 24-hour hotline at __contractor's 24-hour number_____.

FORM SD-9: FIRE DEPARTMENT SHUTDOWN NOTIFICATION

| Hydrant/Fire Service Valve Number | Service Diameter (inches) | Location (1) | Shutdown Start and End Time | Shutdown Date |
|---|---|---|---|---|
| | | | | |
| | | | | |
| | | | | |
| | | | | |
| | | | | |
| | | | | |
| | | | | |
| | | | | |
| | | | | |
| | | | | |
| | | | | |
| | | | | |
| | | | | |
| | | | | |
| | | | | |
| | | | | |
| | | | | |
| | | | | |
| | | | | |
| | | | | |
| | | | | |
| | | | | |
| | | | | |
| | | | | |
| | | | | |
| | | | | |
| | | | | |
| | | | | |
| | | | | |
| | | | | |

1. Enter street name and the extent of the water main that will be shut down.

FORM WT-1: WATER AND SEWER WET TAP REQUEST FORM

| Wet Tap Number | Address, Station (1) | Type (2) | Sizes (3) | Date Requested |
|---|---|---|---|---|
| | | | | |
| | | | | |
| | | | | |
| | | | | |
| | | | | |
| | | | | |
| | | | | |
| | | | | |
| | | | | |
| | | | | |
| | | | | |
| | | | | |
| | | | | |
| | | | | |
| | | | | |
| | | | | |
| | | | | |
| | | | | |
| | | | | |
| | | | | |
| | | | | |
| | | | | |
| | | | | |
| | | | | |
| | | | | |
| | | | | |
| | | | | |
| | | | | |
| | | | | |

1. Enter street name and approximate location, example west side of Central Avenue, 500 feet south of Indian School. Include Light Rail Plan stationing and attach copy of contract drawing identifying the wet tap.
2. Enter water or sewer.
3. For example: 2 inch service to 8 inch main.

# *APPENDIX E CATHODIC PROTECTION SYSTEM REQUIREMENTS*

## CORROSION CONTROL SYSTEM TESTING

PART I – GENERAL

1.01 SUMMARY

A. Section includes:

1. Furnishing and performing corrosion control system testing

1.02 REFERENCES

A. National Association of Corrosion Engineers (NACE) International

1. NACE RP0169 Control of External Corrosion on Underground or Submerged Metallic Piping Systems

B. National Fire Protection Association (NFPA)

1. NFPA 70 National Electric

1.03 SUBMITTALS

A. Submit the following information in accordance with the requirements of the Submittal Procedures, except as modified herein.

1. Qualifications of the NACE certified corrosion specialist per Subparagraph 1.04A.1. Contract Deliverable Requirements List (CDRL) 13112-1

2. Layout of each system being tested per Paragraph 3.01A. CDRL 13112-2

3. Instrument hook-up for each test per Paragraph 3.01B. CDRL 13112-3

4. List of proposed instruments for performing testing per Paragraph 2.01A. CDRL 13112-4

5. Test results, including Certificates of Inspection CDRL 13112-5

1.04 QUALITY ASSURANCE

A. Perform testing of the cathodic protection system under the supervision of a NACE certified corrosion specialist.

1. Submit the qualifications of the NACE certified corrosion specialist including name, certification number, and a brief description of three similar projects with the name, telephone number and contact person for the owner.

B. Perform all tests in the presence of the resident engineer.

PART 2 – PRODUCTS

2.01 TEST EQUIPMENT

A. Submit a list of the instruments proposed to be used to perform the testing required by this Section; include the manufacturer's name, type of instrument, model number, serial number and current calibration certificate for each instrument.

B. DC voltmeter: Use a multi-scale DC voltmeter with the following features:

1. Type: center zero
2. Minimum sensitivity: 1 megaohm per volt
3. Accuracy: accurate to within 1 percent of full scale
4. Full scale ranges:

a. 0 to 10 millivolts
b. 0 to 100 millivolts
c. 0 to 1 volt
e. 0 to 100 volts

C. DC ammeter: Use a multi-scale DC ammeter, or a millivolt meter and shunts, with the following features:

1. Maximum shunt voltage drop: 20 millivolts
2. Accuracy: accurate to within 1 percent of full scale
3. Full scale ranges:

a. 0 to 1 ampere
b. 0 to 10 amperes
c. 0 to 100 amperes

D. Resistivity meter: Use a self-contained synchronous vibrator, battery-powered instrument capable or providing readings unaffected by the resistance of leads or probes.

E. DC power source:

1. Use a 6 or 12-volt automotive type wet cell battery or nickel cadmium rechargeable dry type battery.

2. For circuits having a high internal resistance, use multiple batteries, a DC generator or portable cathodic protection rectifier.

F. Test wires:

1. Conductor: stranded copper of assorted sizes and lengths to suit test conditions

2. Insulation: 600 volt, minimum, neoprene insulation in perfect condition

G. Steel probes for making electrical contact with buried structures in absence of test stations.

H. Slide-wire resistors:

1. Range: 0-400 Ohm
2. Capacity: 15-Ampere over the full range of adjustment

I. Reference electrode: Use a saturated copper-copper sulfate reference half-cell with a ceramic porous plug.

1. Length: 5 inches
2. Diameter: 1-3/8 inches or 3 inches

J. Holiday detector: ring type, sizes as needed.

K. Miscellaneous tools: as required for making wire connections, splicing and similar operations.

## PART 3 – EXECUTION

### 3.01 PREPARATION

A. Prepare and submit layouts of the systems being tested, showing the locations of system components and proposed test stations.

B. Prepare and submit an instrument hook-up for each test.

3.02 FIELD QUALITY CONTROL

A. Electrical continuity testing:

1. Test the following items for electrical continuity:

a. Electrically bonded mechanical and bell and spigot pipe joint

1) Test pipe joints before and after backfilling is completed

2) Test individual and multiple bonds

b. Concrete reinforcement in bridges, stations, retaining walls, aerial and floating slabs, concrete pipe and building structures

2. Continuity testing - single bond:

a. Test procedure:

1) Connect the instruments and power source across the bond to be tested as shown in Figure 1.

a) Use separate sets of contact points and wires to the structures for voltage and current circuits.

2) Beginning with highest scales on the voltmeter and ammeter, close the switches and observe the meter readings.

3) Reduce the meter ranges until the lowest possible scale is reached, and adjust the current level to less than five amperes.

4) Read the ON values of both voltage and current.

5) Break the circuit and immediately read both voltage and current OFF values.

6) Record the ON and OFF readings on a data sheet, and determine the incremental current and voltage changes.

a) Obtain a minimum of three readings to ensure accuracy.

7) Determine the bond resistance of a single bond and the theoretical resistance of a single bond using the equations in Figure 1, and record the result for each calculation.

b. Acceptance criteria:

1) The actual bond resistance of a single bond may not exceed the calculated theoretical resistance of a single bond by more than 10 percent.

3. Continuity testing - multiple bonds in parallel:

a. Test procedure:

1) Where two structures are bonded by multiple bonds in parallel, test the multiple bonds as specified for a single bond in Subparagraph 3.02A.

2) Record resistance readings obtained.

3) Determine the bond resistance of multiple bonds in parallel using the equation for resistance of a single bond, and the theoretical resistance of multiple bonds in parallel using the equation for theoretical resistance between structures connected by multiple bonds in parallel in Figure 1. Record the result for each calculation.

b. Acceptance criteria:

1) The measured bond resistance of multiple bonds in parallel may not exceed the calculated theoretical resistance of multiple bonds in parallel by more than 10 percent.

4. Continuity testing - multiple bonds in series:

a. Test procedure:

1) Connect the instruments and power source across the multiple bonds in series to be tested as shown in Figure 2.

a) Use separate sets of contact points and wires to the structures for voltage and current circuits.

2) Perform the test as specified for the single bond test in Subparagraph 3.02A.

3) Determine and record the actual resistance between points A and B shown on Figure 2, including the bonds in series, as specified for the single bond test in Subparagraph 3.01A.2.a.

4) Calculate the theoretical resistance of the multiple bonds in series using the equation in Figure 2, and record the result for the calculation.

b. Acceptance criteria:

1) The measured total resistance measured between points A and B may not exceed the theoretical resistance of the sum of the bonds plus the theoretical resistance of the structure between points A and B by more than 10 percent.

B. Testing insulating joints:

1. Test the following installed insulating devices:

a. Insulated flanges and unions

1) Test buried flanges and fittings before and after backfilling is completed.

2) Test exposed flanges and fittings before and after installation is completed.

3) Test each flange or union individually, using established test wires.

2. Test procedure:

a. Set up the instrumentation as shown in Figure 3.

1) If the pipe length is too short for properly spacing the test connection as shown, use the maximum possible spacing for the L-value.

b. With switches S1 and S2 open, read and record the value of E0.

c. Close switch S1 while keeping switch S2 open, and read and record current 11 and voltage El.

d. Calculate the calibration factor, K, for the millivolt shunt using the equation shown in Figure 3.

e. With switches S1 and S2 open, again read and record the value of E0.

f. Close switch S2 while keeping switch S1 open, and read and record current l2 and voltage E2.

g. Calculate ΔE2, the difference between E0 and E2.

h. Calculate and record the percentage of insulating joint electrical leakage using the equation shown in Figure 3.

3. Acceptance criteria:

a. The measured insulating joint electrical leakage may not exceed 2 percent.

C. Cathodic protection system testing for steel and ductile iron structures:

1. Test procedure:

a. Test cathodic protection systems in accordance with NACE RP0169.

2. Acceptance criteria:

a. If the acceptance criteria is not met, the corrosion specialist must identify the cause of the cathodic protection system inefficiency in each particular area and prescribe actions for the contractor to take to establish a cathodic protection system meeting the acceptance criteria at no additional cost to METRO.

1) Subsequent to the completion of the corrective action, repeat the testing.

D. Insulating coating testing:

1. Inspect the coating using both a visual inspection and an electrical spark holiday detector throughout the pipe after coating application.

2. Do not allow the holiday detector to remain stationary while the power is ON or to travel at a speed exceeding 0.3 meter per second.

a. Voltage: 5000 volts, minimum, or as recommended by the manufacturer.

3. Whenever defects are discovered by either visual examination or the holiday detector, clearly indicate the locations of the defects by using a circular chalk mark or cross.

4. Repair any damaged or defective coating and retest the repaired area.

5. Do not backfill prior to obtaining acceptance of the coating.

E. Submit test results in an approved format for the tests specified and performed.

1. Include Certificates of Inspection.

## PART 4 – MEASUREMENT AND PAYMENT

### 4.01 MEASUREMENT

A. No separate measurement will be made for the work of this Section.

### 4.02 PAYMENT

A. No separate payment will be made for the work of this Section because its cost is incidental to other payment items.

FIGURE 1 – SINGLE BOND AND MULTIPLE BONDS IN PARALLEL

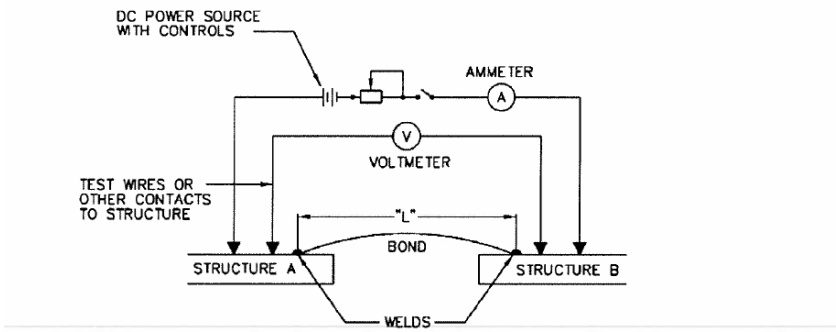


FORMULA FOR DETERMINING RESISTANCE OF SINGLE BOND USING TEST DATA:

$R_T = \Delta E / \Delta i$

WHERE $R_T$ = RESISTANCE OF ONE BOND (OHM)
$\Delta E$ = INCREMENTAL CHANGE IN POTENTIAL (VOLT)
$\Delta i$ = INCREMENTAL CHANGE IN CURRENT (AMPERE)

FORMULA FOR CALCULATING THEORETICAL RESISTANCE OF SINGLE BOND:

$Rc = (L) \times (R_L)$

WHERE Rc = CALCULATED RESISTANCE OF ONE BOND (OHM)
L = LENGTH (METER)
$R_L$ = RESISTANCE (OHM/METER) FROM WIRE TABLE FOR BOND WIRE USED

FORMULA FOR CALCULATING THEORETICAL RESISTANCE BETWEEN STRUCTURES CONNECTED BY MULTIPLE BONDS IN PARALLEL:

$Rcp = Rc/N$

WHERE Rcp = CALCULATED RESISTANCE OF MULTIPLE BOND WIRE IN PARALLEL (OHM)
Rc = CALCULATED RESISTANCE OF ONE BOND (OHM)
N = NUMBER OF BONDS IN PARALLEL

NOTE:

1. VOLTMETER CONTACTS TO STRUCTURE MUST BE CLOSE ENOUGH TO WELDS TO ENSURE THAT STRUCTURE RESISTANCE IS NOT SIGNIFICANT.

FIGURE 2 – MULTIPLE BONDS IN SERIES

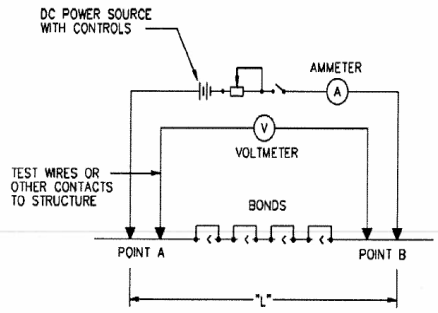


FORMULA FOR CALCULATING THEORETICAL RESISTANCE OF STRUCTURE WITH MULTIPLE BONDS IN SERIES:

$$Rcs = Rc \times N \times \rho \frac{L}{A}$$

WHERE Rcs= CALCULATED RESISTANCE OF A NUMBER OF BONDS IN SERIES (OHM)
Rc = CALCULATED RESISTANCE OF ONE BOND (OHM)
N = NUMBER OF BONDS IN SERIES
$\rho$ = RESISTIVITY OF STRUCTURE (OHM-cm)
L = LENGTH OF STRUCTURE (cm)
A = CROSS SECTIONAL AREA OF STRUCTURE $(cm)^2$

FIGURE 3 – INSULATING JOINT

**FIGURE 3 – INSULATING JOINT**

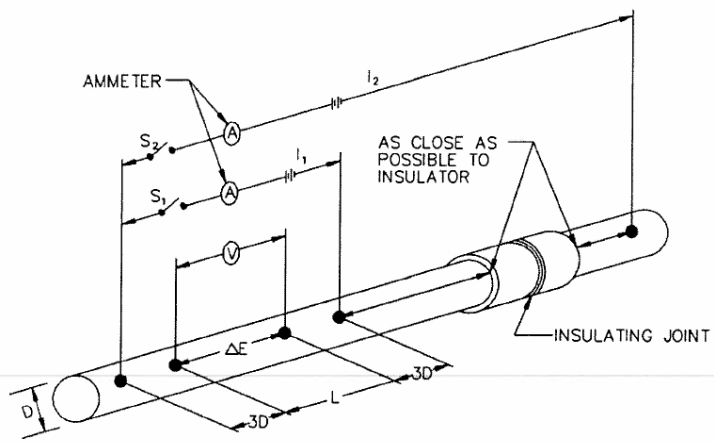


| PIPE SIZE | L (MIN) |
|---|---|
| 4" AND SMALLER | 15 ft |
| 6" – 10" | 30 ft |
| 12" – 18" | 50 ft |
| LARGER THAN 18" | 80 ft |

CALIBRATION OF MULTIVOLT SHUNT:

$$K = \frac{I}{\Delta E_1} = \frac{\text{CURRENT (AMP)}}{\text{POTENTIAL (MILLIVOLT)}}$$

WHERE $\Delta E_1 = E_1 - E_0$ ($S_1$ CLOSED, $S_2$ OPEN)

CALCULATION OF INSULATING JOINT ELECTRICAL LEAKAGE:

$$\% \text{ LEAKAGE} = \frac{\Delta E_2 \times K \times 100}{I_2}$$

WHERE $\Delta E_2 = E_2 - E_0$ ($S_1$ OPEN, $S_2$ CLOSED)

CATHODIC PROTECTION SYSTEM
**SACRIFICIAL ANODES**

## PART 1 – GENERAL

### 1.01 SUMMARY

A. Section includes:

1. Requirements for designing, furnishing and installing sacrificial anode type cathodic protection systems

### 1.02 REFERENCES

A. American Society for Testing and Materials (ASTM)

1. ASTM B418 Specification for Cast and Wrought Galvanic Zinc Anodes

2. ASTM B843 Standard Specification for Magnesium Alloy Anodes for Cathodic Protection

3. ASTM Dl248 Specification for Polyethylene Plastics Molding and Extrusion Materials

4. ASTM G97 Standard Test Method for Laboratory Evaluation of Magnesium Sacrificial Anode Test Specimens for Underground Applications

B. American Water Works Association (AWWA)

1. AWWA C209 Cold-Applied Tape Coatings for the Exterior of Special Sections, Connections and Fittings for Steel Water Pipelines

2. AWWA C210 Liquid Epoxy Coating Systems for the Interior and Exterior of Steel Water Pipelines

3. AWWA C214 Tape Coating Systems for the Exterior of Steel Water Pipelines

4. AWWA C216 Heat-Shrinkable Cross-Linked Polyolefin Coatings for the Exterior of Special Sections, Connections and Fittings for Steel Water Pipelines

5. AWWA C217 Cold-Applied Petrolatum Wax Tape Coating for the Exterior of Special Sections, Connections and Fittings for Buried or Submerged Steel Water Pipes

C. Insulated Cable Engineers Association (ICEA)

1. ICEA S-61-402 Thermoplastic-Insulated Wire and Cable

D. Military Specifications (MIL)

1. MIL-A-18001 Anode Corrosion Preventive, Zinc, Slab Disc and Rod Shaped

E. NACE International

1. NACE Standard RP0169, Control of External Corrosion on Underground or Submerged Metallic Piping Systems

F. National Electrical Manufacturer's Association (NEMA)

1. NEMA ICS 6-110 Industrial Controls and Systems Enclosures
2. NEMA LI 1 Industrial Laminated Thermosetting Plastics

G. Underwriters Laboratories Inc. (UL)

1. UL 83 Thermoplastic Insulated Wires and Cables

2. UL 486A Wire Connectors and Soldering Lugs for use with Copper Conductors

## 1.03 SUBMITTALS

A. Submit the following information in accordance with the requirements of the Submittal Procedures, except as modified herein.

1. Product data:

a. Exothermic weld kits per Subparagraph 2.01E.2. CDRL 13111-1

b. Terminals and terminal blocks per Subparagraph 2.02A.5. CDRL 13111-2

c. Heat-shrinkable pipe joint sleeves per Subparagraph 2.02H.3. CDRL 13111-3

d. Bitumastic per Subparagraph 2.03A.3. CDRL 13111-4

e. Epoxy coating system for valves, including field repair coatings, per Subparagraph 2.04A.l.a. CDRL 13111-5

2. Shop drawings:

a. Schematics and interconnecting drawings per Subparagraph 3.01A.l.a. CDRL 13111-8

b. Connection diagrams and outline drawings per Subparagraph 3.01A.l.b. CDRL 13111-9

c. Details of the proposed application of heat-shrinkable coating materials per Subparagraph 3.01A.l.c. CDRL 13111-10

d. As-built details of all test point installations per Paragraph 3.03C. CDRL 13111-11

3. Working drawings:

a. Assembly, erection and installation drawings and manuals per Subparagraph 3.01A.2.a. CDRL 13111-12

b. Details of the application of the heat-shrinkable pipe joint sleeves per Subparagraph 2.02H.4. CDRL 13111-13

4. Qualifications of NACE International certified corrosion specialist. CDRL 13111-14

5. Certificates of compliance:

a. Certificate of compliance for valve coating system per Subparagraph 2.04A.l.b. CDRL 13111-15

b. Certificate of compliance for ductile iron pipe fittings coating system per Subparagraph 2.04B.3. CDRL 13111-17

c. Certificate of compliance for magnesium anode chemical composition testing per Subparagraph 2.02D.3.b. CDRL 13111-18

6. Test reports per Paragraph 3.03E. CDRL 13111-19

7. Operations and maintenance manuals for the cathodic protection system per Paragraph 1.05B. CDRL 13111-20

8. Performance data per Paragraph 1.04C. CDRL 13111-21

## 1.04 QUALITY ASSURANCE

A. Perform installation, inspection and testing of the cathodic protection system under the supervision of a NACE certified corrosion specialist.

1. Submit the qualifications of the NACE certified corrosion specialist including the name, certification number and a brief description of three similar projects with the name, telephone number and contact person of the owner.

B. Test cathodic protection system, in accordance with the aforementioned Corrosion Control System Testing requirements, for proper current output and level of cathodic protection provided to piping systems after installation of anodes and associated wiring and junction boxes, but before final street paving or construction of concrete sidewalks.

C. Provide performance data for each specified item in this Section.

## 1.05 SYSTEM STARTUP

A. Perform cathodic protection system activation and confirmation of the cathodic protection system.

B. Submit draft operations and maintenance manuals for the cathodic protection system.

1. Include parts and special tools lists.

2. Following system startup, update operations and maintenance manuals and resubmit them.

# PART 2 – PRODUCTS

## 2.01 MATERIALS

A. Cathodic protection and bonding cables:

1. Provide cathodic protection cables that comply with ICEA S-61-402 and UL 83.

2. Insulation:

a. Insulate the cables with high molecular weight (HMW) Type CP polyethylene insulation not less than 7/64 inch thick that complies with the requirements of ASTM D 1248, Type I, Class C, Grade 5.

3. Conductors:

a. Provide stranded copper conductors for the cables sized as shown on the standard drawings.

4. Color code:

a. Lead wires to pipeline protected side—#8 HMW/PE—Black

b Lead wires to unprotected pipe—#10 HMW/PE—Black

c Anodes wires—#10 HMW/PE—White

d Reference cell—#12 HMW/PE—Red

e Reference electrode—#8 HMW/PE—Black color-coded at five-foot intervals with green Phase tape

B. Casing pipe, casing spacer/insulators and end seals:

1. Provide casing pipe, casing spacer/insulators, and end seals in accordance with Casing Pipe requirements.

2. Use HDPE casing pipe whenever possible.

C. Conduit:

1. Provide conduit in accordance with the requirements of Raceway and Boxes requirements, and as indicated on the Plans.

D. Epoxy grout:

1. Provide epoxy grout in accordance with Grouts requirements.

E. Exothermic weld kits:

1. Provide exothermic weld kits as manufactured by Erico, Inc., or approved equal.

2. Submit the manufacturer's product data for the exothermic weld kits and cartridges proposed for use.

## 2.02 MANUFACTURED UNITS

A. Terminals and terminal blocks:

1. Always use a crimping tool and terminal blocks.

2. Size the DC output terminal for not less than # 8 AWG cable.

3. For connections, provide compression type ring tongue or spring spade (locking spade) terminals sufficiently strong to prevent their breakage under the conditions of vibration for which the equipment is designed.

a. Slotted, flanged spade and hook terminals, or terminals of the quick disconnecting type, are not acceptable.

b. If adjacent cable terminations permit contact, use insulated ferrules.

4. Provide terminals and terminal blocks as manufactured by Cott Manufacturing Co., or approved equal.

5. Submit the manufacturer's product data for the terminals and terminal blocks proposed for use.

B. Connectors and lugs:

1. Provide connectors and lugs in accordance with the requirements of UL 486A.

C. Flange isolation kits:

1. Provide flange isolation kits consisting of one full face sealing gasket and one full length insulating sleeve with two steel washers and two insulating washers for each bolt.

2. Insulating gasket:

a. Insulating gasket retainers shall be full faced, Type 3, NEMA G-10 epoxy retainers with a nitrate (Buna-N) rectangular cross section O-ring sealing. Minimum total thickness shall not be less than 118 inch. Dielectric strength shall not be less than 550 volts per mil, and compressive strength of not less than 50,000 psi. Use PSI Linebacker, or approved equal.

3. Insulating sleeves:

a. Provide full length, one piece, insulating bolt sleeves for the appropriate bolt size. Insulating sleeves shall be NEMA G-10 epoxy glass 1/32 inch thick. Dielectric strength shall be not less than 400 volts per mil.

b. Sleeve lengths: Two flange thicknesses, including raised faces, plus gasket thickness, plus two insulating washer thicknesses, plus steel washer thicknesses.

4. Washers:

a. Provide two insulating washers and two steel washers for each bolt sleeve.

b. Insulating washers shall be NEMA G-10 epoxy glass with a minimum thickness of 1/8 inch. Dielectric strength shall be no less than 550 volts per mil, and compressive strength no less than 50,000 psi.

c. Steel washers shall be machine cut, deburred and at least 1-1/4 inch in outside diameter by 11 gauge thick.

D. Sacrificial anodes (magnesium anode):

1. Provide prepackaged, high potential magnesium alloy anodes conforming with the requirements of ASTM B843, Grade M1C.

2. Anodes shall have a minimum open circuit potential of -1.70 volts referenced to Cu/CuS04 with a minimum acceptable current efficiency of 50 percent. Testing of these properties shall be in accordance with ASTM G-97.

3. Provide anodes consisting of an iron core and ingot, lead wire with an encapsulated connection to the core, backfill and a cloth sack.

a. Fabricate the ingot from a high potential magnesium alloy with the following chemical composition as a percentage of weight:

1) Aluminum: 0.01% maximum
2) Manganese: 0.5 - 1.3%
3) Silicon: 0.05% maximum
4) Copper: 0.02% maximum
5) Nickel: 0.001% maximum
6) Iron: 0.03% maximum
7) Other: 0.05% each or 0.3% maximum
8) Magnesium: remainder

b. Submit a Certificate of Compliance for the magnesium anode chemical composition test indicating compliance with the specified chemical composition.

c. Provide a net alloy weight of 48 pounds.

4. Enclose the anodes in a cloth sack and backfill the sack with backfill consisting of 75 percent hydrated gypsum, 20 percent bentonite and 5 percent sodium sulfate.

5. Provide an anode lead wire sized as shown on the Plans, factory connected to the anode, and with the connection sealed with cast epoxy resin encapsulation.

6. Provide anode lead wires long enough to permit installation to test stations without use of underground splices.

E. Reference electrode (zinc anode):

1. Provide packaged zinc reference anodes that comply with the requirements of ASTM B418, Type II and MIL-A-18001 with a galvanized steel rod and the following additional requirements:

a. Ingot weight: 5 pounds

b. Provide a single conductor anode lead wire sized as shown on the Plans, factory connected to the anode and with the connection sealed with cast epoxy resin encapsulation.

c. Package the anode in a permeable cloth sack containing compacted backfill of a mixture consisting of 50 percent hydrated gypsum and 50 percent bentonite.

F. Test stations:

1. Flush-to-grade test stations:

a. Provide flush-to-grade test stations consisting of 5-inch diameter plastic pipe with a heavy cast-iron loading cover with H-20 traffic rotating and collar suitable for both curbside and roadway installation as shown on the Plans.

The test box used should be traffic-rated, for example H-20.

1) Provide at-grade test stations directly above the pipe where possible, with a 6-3/8 inch nominal diameter cast iron curb box cover permanently marked with the cast or embossed words "CP TEST," test lead wires, nine and seven terminals.

2) Provide a top section nominally 18 inches long and flanged to prevent setting.

2. Pole mounted test stations:

a. Provide pole mounted test stations consisting of a weatherproof NEMA Type 3R terminal box complying with the requirements of NEMA ICS 6-110 with a removable cover permanently marked with the cast or

embossed words "CP TEST," test lead wires, and seven terminals as shown on the Plans.

3. Flush-to-wall test stations:

   a. Provide flush-to-wall test stations consisting of a 6-inch square wall-mount box and watertight flush-mounting cover permanently marked with the cast or embossed word "CP TEST," test lead wires, and seven terminals as shown on the Plans.

4. Roadway (manhole), highway-rated test box:

   a. Provide roadway test boxes at manholes H-20 traffic rated as shown on the Plans.

G. Insulation spacer (electrical contact separators):

1. Provide electrical contact separators made from HDPE plastic with the minimum thicknesses and lengths as shown on the Plans.

H. Heat-shrinkable pipe joint sleeves:

1. Provide heat-shrinkable, cross-lined polyolefin pipe joint sleeve coatings in accordance with AWWA C216.

   a. Heat-shrinkable materials: Type I or Type II.

   b. Filler materials: Use those recommended by the manufacturer and approved by the resident engineer.

   c. Repair materials: Type II.

2. Supply heat-shrinkable pipe joint sleeves in kits complete with filler materials for each joint.

   a. Package the kits for protection from mechanical damage, and clearly mark the kits with the pipe diameter and type of joint.

3. Submit the manufacturer's product data for the materials proposed for use as heat-shrinkable pipe joint sleeves.

4. Submit shop drawings detailing the proposed application of the heat-shrinkable pipe joint sleeves.

I. Insulated unions:

1. Provide insulated unions as manufactured by Central Plastics Company, or approved equal.

J. Floor and wall pipe sleeve seal insulators:

1. Provide neoprene link seals with molded, non-conductive compression plates capable of withstanding 30 feet of static head for 30 days without leaking as shown on the Plans.

K. Pipe casing spacer/insulators:

1. Provide insulating plastic pipe casing spacers in accordance with the requirements of Casing Pipe, and as shown on the Plans.

L. Cable splice kit:

1. Provide cable splice kits for encapsulating cable splices in cast epoxy resin.

2. Do not use cable splice kits after their expiration date.

3. Manufacturer: Scotchcast or approved equal.

## 2.03 COATINGS

A. Bitumastic:

1. Provide a bituminous coating with the following minimum properties:

a. Dry film thickness:

1) Provide the thickness as specified, or as recommended by the manufacturer for the specified system (but not less than 15 mils).

b. Provide a chemical or mechanical bond to the metal.

1) Pressure sensitive or non-bonding systems are not acceptable.

c. Mechanical characteristics: Capable of withstanding reasonable abuse during handling and installation and earth stresses after installation for the design life of the system.

2. Approved products and manufacturers: Tapecoat TC 2000 Mastic as manufactured by Tapecoat Company or approved equal.

3. Submit product data for the bitumastic.

B. Tape coating for isolating flanges:

1. Provide external wax tape coating in accordance with the requirements of AWWA C217.

## 2.04 SHOP FINISHING

A. Valve coatings:

1. Shop coat all exterior ferrous parts of valves, except finished or bearing surfaces, with liquid epoxy in accordance with AWWA C550 and with the following supplemental requirements:

a. Submit manufacturer's data for the epoxy coating system proposed for use on valves, including field repair coatings.

b. Submit an affidavit of compliance for the shop applied epoxy coating system for valves stating that all materials and workmanship comply with the acceptable parameters for coating system components, surface preparation, coating application and coating repair at the shop.

B. Ductile iron fitting coatings:

1. Shop coat all ductile iron pipe fittings with liquid epoxy in accordance with AWWA C210 as specified for all exterior ferrous parts of valves, or shop coat them with cold-applied tape in accordance with AWWA C209.

a. If the fittings are being coated in accordance with AWWA C209, comply with the following additional requirements:

1) Provide Type II tape with a nominal applied total thickness of 60 mils.

2) Provide straight edged or tapered cut backs as recommended by the manufacturer and applicator.

a) Provide 6 inch cutbacks from straight (spigot) ends.

b) Provide cut backs from bell ends to the shoulder of the bell.

c) Provide cut backs from bell ends to the shoulder of the bell.

d) Provide cut backs from flanged ends 2 inches from the back of the flange.

2. Submit manufacturer's product data for the coating materials proposed for use on shop coated ductile iron pipe fittings, including materials for field repairs.

3. Submit an affidavit of compliance for the shop applied coating on ductile iron pipe fittings stating that all materials and workmanship complied with the acceptable parameters for coating system components, pipe preparation, coating application and coating repair at the shop.

## PART 3 – EXECUTION

### 3.01 PREPARATION

A. Submit the following shop drawings and working drawings prior to installing the cathodic protection system:

1. Shop drawings:

a. Schematics and interconnecting drawings, including anode, reference electrode and test station locations.

b. Connection diagrams and outline drawings.

c. Details of the proposed application of heat-shrinkable coating materials.

2. Working drawings:

a. Assembly, erection and installation drawings and manuals.

### 3.02 INSTALLATION

A. Welded connections:

1. Make all connections between copper conductors and the pipe, and all splices between copper conductors with exothermic welds.

a. Avoid splicing underground cables where possible.

b. Use cast insulating splice kits to make necessary splices and repairs.

2. Make all connections in conformance with the manufacturer's recommended procedures, surface preparation, materials and equipment, and with the following additional requirements:

a. Do not allow the hot mold or welding debris to contact coated pipe.

b. Remove all slag from the mold after each weld.

1) Clean the mold cover after every six to 10 welds.

c. Remove the slag from the weld after it has cooled.

d. Cover the entire area of the test station wire welds with a bitumastic coating in accordance with the manufacturer's instructions.

1) Coat all wire splices with a cable splice kit in accordance with the manufacturer's instructions.

a) Do not use splice insulation kits after their expiration date.

e. Do not coat the welds of bond wires across pipe joints that will be covered with heat-shrinkable sleeves.

B. Corrosion control bonding:

1. Electrically bond all push-on and mechanical joints on cathodically protected ductile iron pipes as shown on the Plans.

C. Corrosion control isolation:

1. Install dielectric insulation for piping complete with external and internal coating, test wires and test boxes as shown on the Plans.

2. Insulated flanges and unions:

a. Install flange insulating kits and insulated unions at locations shown on the Plans, complete with test stations.

1) Install flange insulating kits in accordance with the manufacturer's instructions and the following:

a) Remove all cutting oils, lubricants, metal filings and other contaminants or debris from the flanges immediately prior to assembly.

b) Mate and align flange pairs so they are parallel and concentric to within 0.10 inch without external loading or springing.

c) Center the bolt sleeves in each bolt hole to ensure that the sleeves will extend through the holes and both insulating washers.

b. Torque the bolts in a three step progressive manner using a star pattern and increasing the torque after each pass until the final torque recommended by the manufacturer is met.

1) Exercise care to prevent cutting the bolt sleeves during the tightening process.

c. Apply a polyamide cured epoxy resin coating to the internal surfaces of pipe on each side of the insulated flanges and unions for a distance equal to twice the pipe diameter as measured from the center line of the flange.

1) Prepare the internal pipe surface, and apply the coating in accordance with the manufacturer's recommendations in two coats to achieve a total dry film thickness not less than 16 mils.

d. Apply the three-part wax coating to all buried insulated pipe flange exteriors in accordance with AWWA C217.

1) Do not apply this coating until the insulated pipe flanges have been tested for electrical isolation.

e. Do not electrically bond insulated joints.

3. Coating underground ductile iron pipe joints:

a. After electrical bonding but before installation of external restraints, such as clamps and tie-rods, coat underground joints on cathodically protected ductile iron pipe.

1) Field coat all underground ductile iron pipe joints with heat-shrinkable pipe joint sleeves in accordance

with AWWA C216, the manufacturer's instructions, and the following:

a) Dress bond wires neatly to follow the contours of the joint to provide as smooth a surface as possible.

b) Install filler material at all sharp bends and other protrusions to establish a smooth contour and eliminate air pockets beneath the heat-shrinkable sleeve.

c) Roughen the pipe tape coating that will be under the sleeve with coarse sandpaper.

d) Allow 30 minutes, minimum, before backfilling sleeved joints.

e) At the direction of the resident engineer, remove and replace any sleeve if installation results in the presence of air pockets, wrinkles, or is otherwise unsatisfactory.

4. Coating bare metal surfaces:

a. Prior to coating bare metal surfaces, remove all residual films with suitable solvents and remove all adherent debris and rust with a wire brush.

b. Thoroughly cover all bare metal surfaces such as tie-rods, clamps, and similar items with bitumastic.

1) Apply bitumastic in accordance with the manufacturer's instructions, using two coats to achieve a final dry film thickness of 20 mils.

2) Do not substitute roofing tar or other similar products for bitumastic.

c. Allow bitumastic to dry completely before backfilling.

5. Pipe sleeves for floor and wall penetrations:

a. Prior to installing pipe sleeves for floor and wall penetrations, clean the pipe to ensure that no debris remains between the pipe and its sleeve.

b. Install pipe sleeves for floor and wall penetrations in accordance with the manufacturer's printed instructions.

c. Use epoxy grout to fill voids or openings at pipe entries where floor and wall pipe sleeve seal insulators cannot be utilized.

6. Casing pipe, casing spacer/insulators, and end seals:

a. If ductile iron pipe is to be encased, provide casing pipe as specified.

b. Install casing spacer/insulators and end seals in accordance with the manufacturer's instructions, complete with test stations, as shown on the Plans.

c. Ensure that the carrier pipe is concentric within the casing pipe and that there is a minimum 1-inch annulus between the pipe and its casing.

d. Ensure that no debris is left in the casing.

7. Electrical contact separators:

a. Install electrical contact separators on cathodically protected pipe when foreign metal or reinforced concrete structures lie within 1 foot vertically of the cathodically protected pipe.

1) Determine contact separator locations in the field.

b. Contact with concrete:

1) Apply tape coating around cathodically protected pipe which will be in contact with concrete anchor blocks, thrust blocks or encasement.

2) If cathodically protected pipe is to rest on a concrete support, place an electrical contact separator between the pipe and support.

D. Anodes

1. Install sacrificial anodes in accordance with NACE RP0169.

a. Wet the packaged anode thoroughly before backfilling the hole.

1) Use native soil, free from stones and bricks, for backfilling.

2) Do not use sand or slurry cement for backfill on anodes.

2. Connect anode lead wires to header cable or in test boxes as shown on the Plans.

E. Test stations:

1. Install flush-to-grade, flush-to-wall, pole mounted and roadway (manhole) test boxes at required locations.

a. Field locate flush-to-grade test boxes.

1) Submit detailed, proposed locations for each flush-to-grade test box to the resident engineer.

2) Locate flush-to-grade test boxes directly over water main.

b. Install post mounted test stations approximately 4 feet above the surface.

2. Install blocking and a concrete pad to provide a rigid installation.

a. Set test boxes in unpaved locations in a concrete pad.

3. Install test wires, anodes, test electrodes and zinc reference electrodes.

a. Route all cabling so it will not cause damage to the wire insulation.

b. Allow enough slack to compensate for soil movements and to permit extension of the wires 6 inches minimum above the box for connection and tests.

c. Coil excess wire in the test box.

d. Where test boxes will offset from pipes by more than 5 feet, protect test wires in a PVC-coated, galvanized rigid pipe conduit and install with tracer tape.

## 3.03 FIELD QUALITY CONTROL

A. Test all welds to pipe by striking the weld at a 45 degree angle with a 2-pound hammer while pulling on the wire.

B. Assist in locating the installed test points so they may be tested in accordance with the aforementioned Corrosion Control System Testing requirements.

C. Submit shop drawings showing as-built details of all test point installations.

D. Manufacturer's field services:

1. Have a manufacturer's representative from the heat-shrinkable pipe joint sleeve manufacturer train the contractor's pipe joint sleeve coating personnel in the proper installation methods for the sleeves as required by AWWA C216.

E. Submit certified test reports documenting all testing performed.

## PART 4 – MEASUREMENT AND PAYMENT

### 4.01 MEASUREMENT

A. Test stations will be measured by each test station furnished, installed on pipelines complete, tested and accepted, unless otherwise indicated on the Plans or in these Specifications.

1. Incidentals not separately measured but a part of each bid item for test stations include excavation, backfill, the test box and cover, terminal blocks, reference zinc electrode, test electrode, wiring, exothermic welds and, where applicable, concrete pads, posts, conduit, banding strap and hardwood blocking.

B. Anodes will be measured by each anode furnished, installed complete with header cable, tested and accepted, unless otherwise indicated on the Plans or in the Specifications.

1. Incidentals not separately measured but a part of each bid item for anodes include excavation, backfill, header cable and cable splicing.

C. Flange Insulating kits will be measured by each flange insulating kit furnished, installed complete, tested and accepted, unless otherwise indicated on the Plans or in the Specifications.

D. Joint bonding kits will be measured by each joint bond kit furnished, installed complete, tested and accepted, unless otherwise indicated on the Plans or in the Specifications. A “kit” is defined as the total number of conductors.

E. An allowance shown as pay item 13111.070 will be negotiated with the contractor once installation drawings are issued for construction in accordance with specifications.

## 4.02 PAYMENT

A. Test stations measured as specified in Paragraph 4.01A will be paid for at the contract unit price for test station provided, unless otherwise indicated on the Plans, in the Specifications or in the Bid Form.

B. Anodes measured as specified in Paragraph 4.01B will be paid for at the contract unit price for each anode provided as listed in Paragraph 4.02F, unless otherwise indicated on the Plans, in the Specifications or in the Bid Form.

C. Flange insulating kits measured as specified in Paragraph 4.01C will be paid for at the contract unit price for flange insulating kits provided, unless otherwise indicated on the Plans, in the Specifications or in the Bid Form.

D. Joint bonding kits measured as specified in Paragraph 4.01D will be paid for at the contract unit price for flange bonding kits provided, unless otherwise indicated on the Plans, in the Specifications or in the Bid Form.

E. The contract unit price will be payment in full for furnishing all labor, materials, tools, equipment and incidentals, and doing all work necessary to complete the work specified.

F. Pay item allowance 13111.070 will be negotiated with the contractor once installation drawings are issued for construction in accordance with specifications.

G. Pay items specified under this Section and incorporated into the bid items for this contract are listed below:

| Pay Item | Description | Pay Unit |
|---|---|---|
| 13111.010 | Test Station (All Types) | Each |
| 13111.020 | Anode - Sacrificial Anodes (Magnesium Anode) | Each |
| 13111.050 | Flange Insulating Kit | Each |
| 13111.060 | Joint Bonding Kit | Each |
| 13111.070 | Incidental Work Items for splices, crimps, header cables | ALL |

Form 13122-A: Single and Multiple Bonds in Parallel (1)

Location:

| | | A | B | C | D | E | F | G | H | |
|---|---|---|---|---|---|---|---|---|---|---|
| | | | | | | | Test Measurements | | | |
| Test Number | Station | Pipe diameter, inch | No. of Bonding Wires | Bonding Wire Size (AWG #) | Bonding Wire Resistance (Rc), Ohms (3) | Maximum Resistance, Rcp x 1.1, Ohms | Current, amps (2) | Voltage, Volts (2) | Measured or Calculated Resistance, Ohms (3) | Date of Test |
| 1 | | | | | | | | | | |
| 2 | | | | | | | | | | |
| 3 | | | | | | | | | | |
| 4 | | | | | | | | | | |
| 5 | | | | | | | | | | |
| 6 | | | | | | | | | | |
| 7 | | | | | | | | | | |
| 8 | | | | | | | | | | |
| 9 | | | | | | | | | | |
| 10 | | | | | | | | | | |
| 11 | | | | | | | | | | |
| 12 | | | | | | | | | | |
| 13 | | | | | | | | | | |
| 14 | | | | | | | | | | |
| 15 | | | | | | | | | | |
| 16 | | | | | | | | | | |
| 17 | | | | | | | | | | |
| 18 | | | | | | | | | | |
| 19 | | | | | | | | | | |
| 20 | | | | | | | | | | |
| 21 | | | | | | | | | | |
| 22 | | | | | | | | | | |
| 23 | | | | | | | | | | |
| 24 | | | | | | | | | | |
| 25 | | | | | | | | | | |
| 26 | | | | | | | | | | |
| 27 | | | | | | | | | | |
| 28 | | | | | | | | | | |
| 29 | | | | | | | | | | |
| 30 | | | | | | | | | | |

1. Refer to Figure 1 - Specification Section 13112.
2. Does not have to be measured if test is performed using a Biddle Meter
3. Column H should be less than or equal to column E to pass.
4. Attach drawing or map with test form identifying joints tested. Match Test Numbers in table with Test Numbers on attached drawing or map.
5. Attach bonding wire resistance table

Form 13122-B: Continuity Testing of Multiple Bonds in Series (1)

Location:

| | Stations | | A | B | C | D | E | F | G | H | I | |
|---|---|---|---|---|---|---|---|---|---|---|---|---|
| Test Number | Start | End | Number of Bonds in Series, N | Average Resistance of One Bond, Ohms (Rc) | Rc X N | Pipe diameter, inches | Pipe Resistivity, Ohm-ft | Pipe Lengt, ft | Pipe Cross Sectional Area, sq. ft. | Pipe Resistance + 10%, Ohms (3) (DxF/G x 1.1) | Measured Resistance, Ohms (4) | Date of Test |
| 1 | | | | | | | | | | | | |
| 2 | | | | | | | | | | | | |
| 3 | | | | | | | | | | | | |
| 4 | | | | | | | | | | | | |
| 5 | | | | | | | | | | | | |
| 6 | | | | | | | | | | | | |
| 7 | | | | | | | | | | | | |
| 8 | | | | | | | | | | | | |
| 9 | | | | | | | | | | | | |
| 10 | | | | | | | | | | | | |
| 11 | | | | | | | | | | | | |
| 12 | | | | | | | | | | | | |
| 13 | | | | | | | | | | | | |
| 14 | | | | | | | | | | | | |
| 15 | | | | | | | | | | | | |
| 16 | | | | | | | | | | | | |
| 17 | | | | | | | | | | | | |
| 18 | | | | | | | | | | | | |
| 19 | | | | | | | | | | | | |
| 20 | | | | | | | | | | | | |
| 21 | | | | | | | | | | | | |
| 22 | | | | | | | | | | | | |
| 23 | | | | | | | | | | | | |
| 24 | | | | | | | | | | | | |
| 25 | | | | | | | | | | | | |
| 26 | | | | | | | | | | | | |
| 27 | | | | | | | | | | | | |
| 28 | | | | | | | | | | | | |
| 29 | | | | | | | | | | | | |
| 30 | | | | | | | | | | | | |

1. Refer to Figure 2 - Specification Section 13112.
2. Average of measured/calculated values obtained from corresponding Form 13122-A. Attach corresponding Form 13122-A.
3. Pipe Resistance = Pipe Resistivity x Legth / Pipe Cross Sectional Area x 1.1
4. Coumn I should be less than or equal to Column H to pass.
4. Attach drawing or map with test form identifying tested pipe section. Match Test Numbers in table with Test Numbers on attached drawing or map.
5. Attach pipe resistance table

Form 13122-C: Insulating Joint Testing (1)

Location:

| Test Number | Station | Type of Test (2) | Measured or Calculated Resistance, Ohms | Leakage, % |
|---|---|---|---|---|
| 1 | | | | |
| 2 | | | | |
| 3 | | | | |
| 4 | | | | |
| 5 | | | | |
| 6 | | | | |
| 7 | | | | |
| 8 | | | | |
| 9 | | | | |
| 10 | | | | |
| 11 | | | | |
| 12 | | | | |
| 13 | | | | |
| 14 | | | | |
| 15 | | | | |
| 16 | | | | |
| 17 | | | | |
| 18 | | | | |
| 19 | | | | |
| 20 | | | | |
| 21 | | | | |
| 22 | | | | |
| 23 | | | | |
| 24 | | | | |
| 25 | | | | |
| 26 | | | | |
| 27 | | | | |
| 28 | | | | |
| 29 | | | | |
| 30 | | | | |
| 31 | | | | |

1. Refer to Figure 3 - Specification Section 13112.
2. MC Miller / Gas Elecronics Model 702 insulating joint tester or per Figure 3.
3. Attach drawing or map with test form identifying tested pipe section.
   Match Test Numbers in table with Test Numbers on attached drawing or map.

Form 13122-D: Pipe Test Station (1)

Location: Date:

| Test Lead | Color | Label | Measured Values, -mV | | Acceptable Range, -mV (2) | |
|---|---|---|---|---|---|---|
| | | | Static | On | Low | High |
| Anode | White | A1 | | | | |
| Anode | White | A2 | | | | |
| Zinc | Red | R | | | | |
| | | | | | | |
| Pipe Test Lead 1 | Black | 1 | | | | |
| Pipe Test Lead 2 | Black | 2 | | | | |
| Pipe Test Lead 3 | Black | D | | | | |
| | | | | | | |
| Test Electrode | Black | E | | | | |
| | | | | | | |

| | Circle One | |
|---|---|---|
| Test Station Installed Correctly | Pass | Fail |
| All Test Leads Labeled Correctly | Pass | Fail |
| Pipe Leads Continuous With Pipe | Pass | Fail |
| All Anodes Functional (no broken cables) | Pass | Fail |
| All References Functional (no broken cables) | Pass | Fail |
| Protection levels meet RP0169-2002 | Pass | Fail |

1. All measurements taken using portable Cu-CuSO4 reference cell.
2. To be compared to static measurements
3. Attach drawing or map with test form identifying test station

Form 13122-E: HDPE Pipe Test Station (1)

Location: Date:

| Test Lead | Color | Label | Measured Values, -mV | | Acceptable Range, -mV (2) | |
|---|---|---|---|---|---|---|
| | | | Static | On | Low | High |
| Anode | White | A | | | | |
| Zinc | Red | R | | | | |
| | | | | | | |
| Pipe Test Lead 1 | Black | 1 | | | | |
| Pipe Test Lead 2 | Black | 2 | | | | |
| Pipe Test Lead 3 | Black | D | | | | |
| | | | | | | |
| Test Electrode | Black | E | | | | |
| | | | | | | |

| | Circle One | |
|---|---|---|
| Test Station Installed Correctly | Pass | Fail |
| All Test Leads Labeled Correctly | Pass | Fail |
| Pipe Leads Continuous With Pipe | Pass | Fail |
| All Anodes Functional (no broken cables) | Pass | Fail |
| All References Functional (no broken cables) | Pass | Fail |
| Protection levels meet RP0169-2002 | Pass | Fail |

1. All measurements taken using portable Cu-CuSO4 reference cell.
2. To be compared to static measurements
3. Attach drawing or map with test form identifying test station

Form 13122-F: Insulating Joint Test Station (1)

Location: Date:

| Test Lead | Color | Label | Measured Values, -mV | | Acceptable Range, -mV (2) | |
|---|---|---|---|---|---|---|
| | | | Static | On | Low | High |
| Anode | White | A1 | | | | |
| Anode | White | A2 | | | | |
| Zinc | Red | R | | | | |
| | | | | | | |
| Existing Pipe Test Lead 1 | Black | 1 | | | | |
| Existing Pipe Test Lead 2 | Black | 2 | | | | |
| New Pipe Test Lead 3 | Black | 3 | | | | |
| New Pipe Test Lead 4 | Black | 4 | | | | |
| New Pipe Test Lead 3 | Black | D | | | | |
| | | | | | | |
| Test Electrode | Black | E | | | | |
| | | | | | | |

| | Circle One | |
|---|---|---|
| Test Station Installed Correctly | Pass | Fail |
| All Test Leads Labeled Correctly | Pass | Fail |
| Pipe Leads Continuous With Pipe | Pass | Fail |
| All Anodes Functional (no broken cables) | Pass | Fail |
| All References Functional (no broken cables) | Pass | Fail |
| Protection levels meet RP0169-2002 | Pass | Fail |

1. All measurements taken using portable Cu-CuSO4 reference cell.
2. To be compared to static measurements
3. Attach drawing or map with test form identifying test station

Form 13122-G: Steel Casing Test Station (1)

Location: Date:

| Test Lead | Color | Label | Measured Values, -mV | | Acceptable Range, -mV (2) | |
|---|---|---|---|---|---|---|
| | | | Static | On | Low | High |
| Anode | White | A | | | | |
| Zinc | Red | R | | | | |
| | | | | | | |
| Pipe Test Lead 1 | Black | 1 | | | | |
| Pipe Test Lead 2 | Black | 2 | | | | |
| Pipe Test Lead 3 | Black | D | | | | |
| Casing Pipe Test Lead 1 | Black | C1 | | | | |
| Casing Pipe Test Lead 2 | Black | C2 | | | | |
| | | | | | | |
| Test Electrode | Black | E | | | | |
| | | | | | | |

| | Circle One | |
|---|---|---|
| Test Station Installed Correctly | Pass | Fail |
| All Test Leads Labeled Correctly | Pass | Fail |
| Pipe Leads Continuous With Pipe | Pass | Fail |
| All Anodes Functional (no broken cables) | Pass | Fail |
| All References Functional (no broken cables) | Pass | Fail |
| Protection levels meet RP0169-2002 | Pass | Fail |

1. All measurements taken using portable Cu-CuSO4 reference cell.
2. To be compared to static measurements
3. Attach drawing or map with test form identifying test station

# *APPENDIX F TV INSPECTION REQUEST*

## TV INSPECTION REQUEST

DATE: _____ REQUESTOR: _____

PHONE #: _____

LOCATION: _____

_____

REASON FOR INSPECTION: _____

_____

Q.S.: _____ *(PLEASE PROVIDE COPY OF SECTION TO BE INSPECTED)*

LINEAL FT. TO INSPECT: _____ C/O-MH#: _____ TO C/O-MH#: _____

PIPE DIAM.: _____

PIPE TYPE: _____

DEPTH OF FLOW: _____ IN.

MH DEPTH: _____

DATE WHEN LAST CLEANED: MH'S: _____ MAIN: _____

COMMENTS: _____

_____

_____

_____

**FOR TV SECTION ONLY**

DATE RECEIVED: _____

ASSIGNED TO: _____ DATE: _____ EQUIP: _____

COMPLETED: _____ DATE: _____

COMMENTS: _____

_____

_____

# *APPENDIX G ODOR CONTROL*

ODOR CONTROL DESCRIPTION:

# *APPENDIX H SPILL PREVENTION*

SPILL PREVENTION:

1. Contractor's acknowledgement of implementing the City of Phoenix spill prevention and reporting requirement _____
(print name and initial)

2. Contractor has the necessary spill reporting forms on site (Y/N): _____